THOMSON 21MG18

MODEL

SERVICE MANUAL

LOCATION OF CONTROLS - EMPLACEMENT DES REGLAGES - SERVICE LAGEPLAN
POSIZIONE REGOLATORI DI SERVIZIO - SITUACIÓN DE LOS AJUSTES

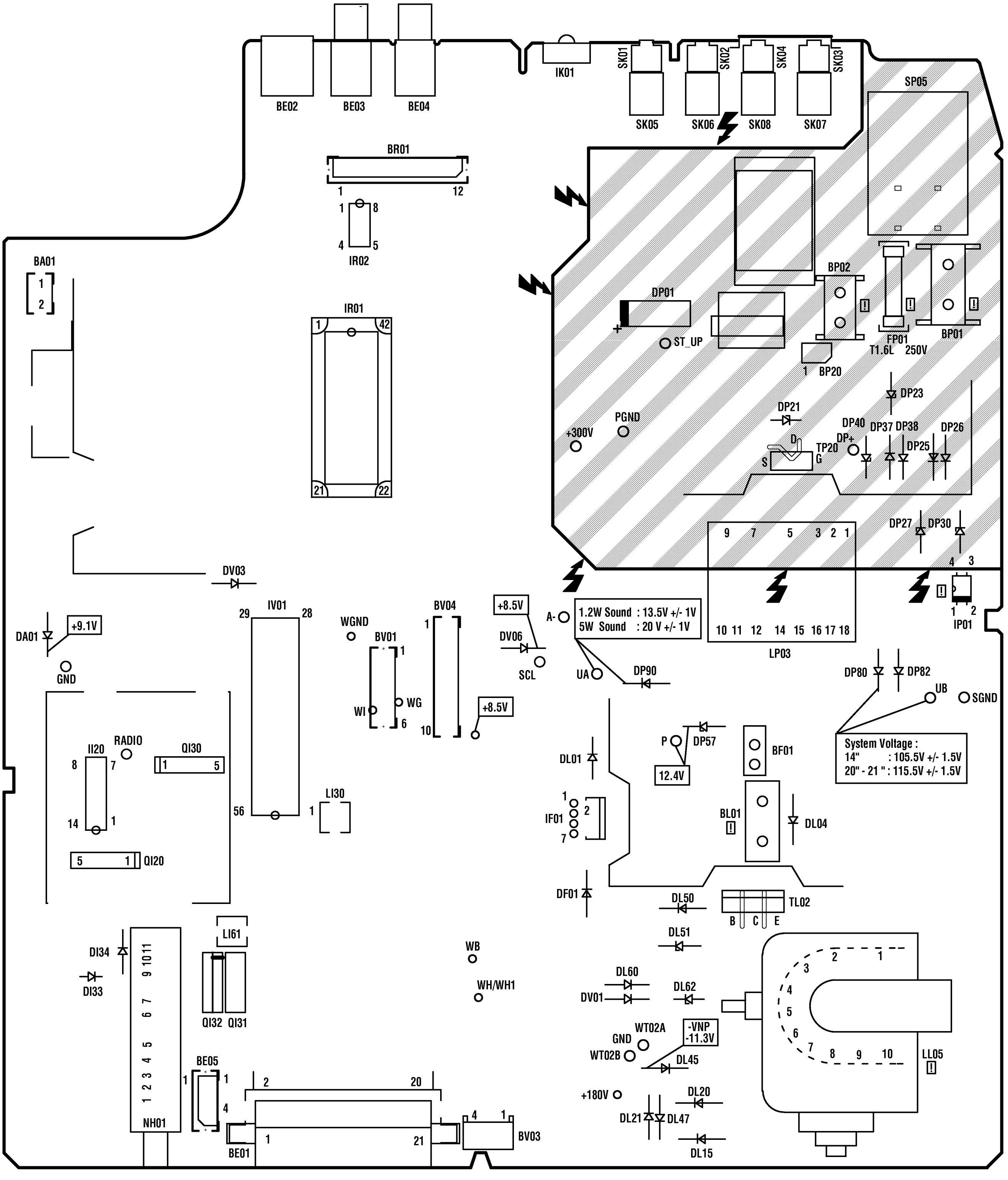

Part of board connected to mains supply.
Partie du châssis reliée au secteur.
Primärseite des Netzteils.
Parte dello châssis collegata alla rete.
Parte del chasis conectada a la red.

⚠ Use isolating mains transformer -
Utiliser un transformateur isolateur du secteur -
Trenntrafo verwenden -
Utilizar un transformador aislador de red -
Utilizzare un trasformatore per isolarvi dalla rete

ADJUSTMENTS - REGLAGES - EINSTELLUNGEN - REGOLAZIONE - AJUSTES

U G2 / cutoff	SCREEN	Peak white pattern. ☼ + ◑ + ◕ = 50%	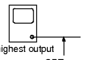 highest output CRT V Collector: TT52,TT62,TT72	Adjust Screen voltage VG2 120V +/- 5V: 14" 145V +/- 5V : 20" & 21" 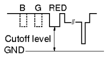 B G RED Cutoff level GND
FOCUS	LL05	Contrast = 100% Brightness = 0% Test pattern (standard values)		Sharp picture
MAIN **SYSTEM VOLTAGE** **+UB**	-	◑ + ☼ + ◕ = 50% Colour-Bar Test pattern W = 100% Mire de barres couleur blanc = 100% Farbbalken W = 100% Monoscopio delle barre colorate bianco = 100% Mira en color blanco = 100% AV1	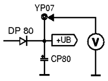 YP07 DP 80 +UB V CP80	14" : 105 V +/- 1.5V 20" - 21" : 115.5 V +/- 1.5V

SERVICE-MODE (GB)

It is necessary to enter the Service Mode in order to carry out alignment of the TV set. Most adjustments can be made with the RCU, except the Focus and Screen voltages.

1. Service Mode Access

1.1 With the RCU, switch the TV set into the "**Standby**" mode.
1.2 Switch "**Off**" the TV set by mains supply switch (wait until LED is dark).
1.3 Whilst pressing the "**Magenta** (text)" button on the RCU switch "**On**" the TV set using the mains switch.
Continue to press the "**Magenta** (text)" button until the Service-setup Sub-menu appears.

```
VT01
1BIL   2BD   3B   4I   5DI   >1
FFI                         OFF
```

Important : The Service Mode cannot be entered if any equipment is connected to the Scart socket, i.e. pin 8 switching voltage present.

2. Service Menu

2.1 Navigation

- Press the ⮝ / ⮟ buttons to select the menu line.
- Press the 《/》 buttons to make adjustments or selection of a menu item.

2.2 Service Sub-Menus

• Service Set-up Sub-menu - IF Sub-menu - Video Sub-menu Geometry Sub-menu - Hotel Menu

2.3 Activation of Service Sub-Menu

To navigate around the Service sub-menu, press the "**Magenta**" button on the RCU, to step through the sub-menus in the following order:
... No Menu ⇨ Service Set-up Sub-Menu ⇨ Service IF Sub-Menu ⇨ Service Geometry Sub-Menu ⇨ Service Video Sub-Menu ⇨ Hotel Menu ⇨ No Menu ⇨ Service Set-up Sub-Menu ...etc.

3. Alignment and storing new function value

3.1 The current value of the selected function is displayed in a hexadecimal form to the right of the function name. This value is adjusted by means of the RCU 《/》 buttons.
3.2 To "**STORE**" the functions new value whilst in any of the Service Sub-menus, press the "**OK**" button on the RCU.
3.3 To leave the Service Sub-menu press the "**Exit**" button on the RCU.

4. Temporary exit from Service Mode

4.1 To temporary leave the Service Mode, press the "**Exit**" button on the RCU. To access the everyday menus, press the "**Menu**" button on the RCU.
4.2 To return to the Service Mode,press the "**Magenta**" button on the RCU

5. Leaving the Service Mode

5.1 To leave the Service mode either, switch the TV set into "**Standby**" or switch "**Off**" the mains supply.

MODE SERVICE (F)

Le mode service sert au réglage de l'appareil. Toutes les opérations de réglage s'effectuent à l'aide de la télécommande (sauf les réglages de Focus et de tension de grille-écran).

1. Accès au mode service

1.1 Commuter le téléviseur en position de veille avec la télécommande.
1.2 Eteindre le téléviseur par l'interrupteur secteur (attendre l'extinction complète du voyant).
1.3 Maintenir la touche "**Magenta** (text)" enfoncée et mettre simultanément le téléviseur en marche avec l'interrupteur secteur. Ne pas relacher la touche "**Magenta** (text)" jusqu'à apparition du sous-menu de Service Setup.

```
VT01
1BIL   2BD   3B   4I   5DI   >1
FFI                         OFF
```

Attention : Le mode service n'est pas accessible si un appareil est connecté à la prise péritélévision.

2. Menu Service

2.1 Déplacement

- Appuyer sur la touche ⮝ / ⮟ pour sélectionner une ligne de menu.
- Appuyer sur la touche 《/》 pour un réglage ou une sélection d'une option.

2.2 Sous-Menus du mode service

• Sous- Menu Setup - Sous- Menu FI - Sous- Menu Video - Sous- Menu Geometrie - Menu Hotel

2.3 Sélection d'un Sous-Menu

En mode service des courtes pressions sur la touche "**Magenta**" permet la sélection d'un sous- menu dans l'ordre suivant :
... Pas de Menu ⇨ Sous-menu Setup ⇨ Sous-menu FI ⇨ Sous-menu Géométrie ⇨ Sous-menu Video ⇨ Hotel Menu ⇨ Pas de Menu ⇨ Sous-menu Setup ...

3. Réglage des fonctions sélectionnées; mémorisation

3.1 La valeur momentanée de la fonction sélectionnée est indiquée sous forme hexadécimale à droite, à coté de la position à régler et peut être modifiée avec la télécommande par la touche 《/》 .
3.2 Dans un sous-menu (Service Setup / FI / Geometrie / Video) appuyer sur la touche "**OK**" pour mémoriser la nouvelle valeur de réglage en NVM (EEPROM).
3.3 Appuyer sur la touche "**Exit**" pour sortir d'un sous-menu.

4. Sortie temporaire du mode service

4.1 Utiliser la touche "**Exit**" de la télécommande.
Le menu utilisateur peut-être accesible via la touche "**Menu**".
4.2 Pour entrer à nouveau dans le Menu Setup utiliser la touche magenta.

5. Sortie du mode service

5.1 Pour sortir du mode service, commuter le téléviseur en position de veille ou le mettre hors service par l'interrupteur secteur.

SERVICE-MODE (D)

Der Service-Mode wird für den Geräteabgleich benötigt. Alle Einstellungen erfolgen mit der Fernbedienung (bis auf Fokuseinstellung und Schirmgitterspannung).

1.Service-Mode einschalten

1.1 Mit der Fernbedienung das Fernsehgerät in Stand-by schalten.
1.2 Das Gerät mit dem Netzschalter ausschalten (warten bis LED dunkel ist)
1.3 Während Sie die margentafarbene Taste **(text)** auf der Fernbedienung gedrückt halten, schalten Sie das Gerät mit dem Netzschalter ein. Halten Sie die margentafarbene Taste solange gedrückt bis das Service Setup Sub-Menü erscheint.

```
VT01
1BIL   2BD   3B   4I   5DI   >1
FFI                         OFF
```

Achtung : Der Service-Mode läßt sich nicht einschalten, wenn an einer Euro-AV-Buchse ein Gerät aktiviert ist, d.h. die Schaltspannung anliegt.

2. Service Menü

2.1 Navigation

-Drücken Sie die Tasten ⮝ / ⮟ zum Auswählen der Menüzeile.
-Drücken Sie die Tasten 《/》 zum Einstellen oder Auswählen in einer Menüzeile

2.2 Service Sub-Menü

• Service Setup Sub-Menü , ZF Sub-Menü , Video Sub-Menü, Geometrie Sub-Menü - Hotel Menü

2.3 Service Sub-Menü aktivieren

Durch einen jeweils kurzen Druck auf die margentafarbene Taste wird das Service Menü in der folgenden Reinhenfolge aktiviert :
... Kein Menü ⇨ Service Setup Sub-Menü ⇨ Service ZF Sub-Menü ⇨ Service Geometrie Sub-Menü ⇨ Service Video Sub-Menü ⇨ Hotel Menü ⇨ kein Menü ⇨ Service Setup Sub-Menü ...

3. Abgleich der gewählten Funktion und Speichern

3.1 Der momentane Wert der gewählten Funktion wird hexadezimal rechts neben der abzugleichenden Position angegeben und kann mit der Taste 《/》 auf der Fernbedienung verändert werden.
3.2 In den Service Sub-Menüs drücken Sie OK um die neuen Funktionswerte im NVM (EEPROM) zu speichern.
3.3 Drücken Sie "**Exit**" zum Verlassen eines Service Sub-Menüs.

4. Vorübergehendes verlassen des Service-Mode

4.1 Auf der Fernbedienung Exit drüken.
Mit der Taste Menü gelangen Sie zum Menü Übersicht.
4.2 Durch Drücken der margentafarbenen Taste gelangen Sie in das Service Setup Sub-Menü.

5. Service-Mode verlassen

5.1 Zum Verlassen des Service-Mode das Gerät in Stand By schalten oder mit dem Netzschalter ausschalten.

SERVICE-MODE (I)

Il Service-Mode è necessario per l'allineamento dell'apparecchio. Tutte le regolazioni si effettuano con il telecomando. (a parte le regolazione del fuoco e le tensioni della griglia schermo).

1. Attivazione del Service-Mode

1.1 Commutare il televisore in stand-by con il telecomando.
1.2 Spegnere l'apparecchio con l'interruttore di rete (attendere finchè il LED è spento)
1.3 Mentre tenete premuto il pulsante "**Magenta** (testo)" dell' RCU, accendete il televisore utilizzando l'interrutto di rete. Continuate a premere il pulsante "**Magenta** (testo)" dell' RCU fino all'apparizione del Service Setup Sub Menu

```
VT01
1BIL   2BD   3B   4I   5DI   >1
FFI                         OFF
```

Attenzione : Il Service-Mode non si può attivare se è attivato un apparecchio collegato alla presa di peritelevisione AV, cioè se è presente la tensione ausiliaria.

2. Service Menu

2.1 Navigazione

- Premere i tasti ⮝ / ⮟ per selezionare la linea del menu
- Premere i tasti 《/》 per la regolazione o la selezionz di un elemento del menu

2.2 Services Sub-Menu

• Service Setup Sub-menu - IF Sub-menu - Video Sub-menu Geometry Sub-menu - Hotel Menu

2.3 Activazione del Service Sub-Menu

Nel Service Mode, una breve pressione sul tasto "**Magenta**" attiverà il Service Menu secondo questa sequenza:
... No Menu ⇨ Service Setup Sub-Menu ⇨ Service IF Sub-Menu ⇨ Service Geometry Sub-Menu ⇨ Service Video Sub-Menu ⇨ Hotel Menu ⇨ No Menu ⇨ Service Setup Sub-Menu ...

3. Taratura della funzione scelta e memorizzazione

3.1 Il valore momentaneo della funzione scelta viene indicato in formato esadecimale a destra, accanto alla posizione da allineare e può essere cambiato con il pulsante 《/》 del telecomando.
3.2 Nel Service Sub Menu (cioè Service Setup / IF /Geometry /Video Sub Menu), premere "**Ok**" per MEMORIZZARE i nuovi valori delle funzioni in NVM (EEPROM).
3.3 Premere il tasto "**Exit**" per uscire da qualsiasi Service Sub Menu.

4. Uscita temporanea dal Service Mode

4.1 Premere Exit sul telecomando.
Al menu di uso quotidiano si accede attraverso il pulsante Menu.
4.2 Il Service Setup Sub Menu è accessibile attraverso il tasto "**Magenta**".

5. Disattivazione del Service-Mode

5.1 Per disattivare il ServiceMode, commutare l'apparecchio in stand-by o spegnerlo con l'interruttore di rete.

MODO SERVICIO (E)

Se necesita el MODO SERVICIO para ajustar el aparato. Todos los ajustes se hacen con el mando a distancia (a excepción de la tensión del sistema, los ajustes del foco y las tensiones de la rejilla de pantalla).

1. Ajustar el Modo Servicio

1.1 Con el mando a distancia conectar a STANDBY el televisor.
1.2 Desconectar el aparato con el interruptor de la red (esperar hasta que el LED se apague).
1.3 Mientras mantiene pulsado el botón "**Magenta** (texto)" de la UCR, pulse el interruptor de paso de la corriente "On" para encender el televisor. Mantenga pulsado el botón "**Magenta** (texto)" hasta que aparezca el submenú de la configuración del servicio.

```
VT01
1BIL   2BD   3B   4I   5DI   >1
FFI                         OFF
```

Atencion : No se puede conectar el MODO SERVICIO cuando en Eurotoma-AV está activado un aparato, es decir, cuando existe tensión de conexión.

2. Menú Servicio.

2.1 Desplazamiento
- Pulse el botón ⮝ / ⮟ para seleccionar la línea del menú.
- Pulse el botón 《/》 para ajustar o seleccionar una opción del menú.

2.2 Submenú Servicio
• Service Setup Sub-menu - IF Sub-menu - Video Sub-menu Geometry Sub-menu - Hotel Menu 2.3 Activación del submenú Servicio

2.3 Activación del submenú Servicio

Al pulsar brevemente el botón "**Magenta**" en el modo Servicio, activará el menú Servicio en la secuencia siguiente:
... No Menu ⇨ Service Setup Sub-Menu ⇨ Service IF Sub-Menu ⇨ Service Geometry Sub-Menu ⇨ Service Video Sub-Menu ⇨ Hotel Menu

3. Ajuste de la función elegida y almacenamiento

3.1 El valor momentáneo de la función elegida es indicado de modo hexadecimal a la derecha, al lado de la posición a ajustar, y puede cambiarse con la tecla 《 o bien 》 en el mando a distancia.
3.2 En el submenú Servicio, es decir, Configuración del servicio/IF/Geometría/Submenú Vídeo pulse "**OK**" para ALMACENAR el nuevo valor de las funciones en NVM (EEPROM).
3.3 Pulse el botón "**Exit**" para salir de cualquier submenú Servicio.

4. Salida temporal del Modo Servicio

4.1 Pulse Salir en el mando a distancia.
Con el botón Menu puede acceder aml menú de uso cotidiano.
4.2 Puede acceder al submenú de configuración del servicio mediante el botón "**Magenta**".

5. Salir del Modo Servicio

5.1 Conmute el aparato a STANDBY a fin de salir del MODO SERVICIO o desconectar con el interruptor de la red.

ALIGNEMENT PROCEDURE - PROCESSUS DE REGLAGES - ABGLEICH - VISUALIZZAZIONE DEL VALORE DELLA REGOLAZIONE - PROCEDIMIENTO DE ALINEACION

CHASSIS TX807 VST - VOLTAGE SYNTHESIS - SYNTHESE DE TENSION - SPANNUNGSSYNTHESE - SINTESI DI TENSIONE - SINTESIS DE TENSION

SET-UP SUB-MENU

VN01
1BIL 2BD 3B 4I 5DI >1
FFI OFF

SET-UP

FT01
1st menu line :
1ère ligne du menu :
Menüzeile :
1° riga menu :
1ª línea del menú :
} **Software code**

Code	Norm	Teletext IC
VN01	BG/I/LL' BG/DKK' I,DK/I,BG	12k ROM VST - No Text. Europe market
VN02	BG/DKK'	12k ROM VST - No Text. Asia market
VT01	BG/I/LL' BG/DKK' I,DK/I,BG	16k ROM VST - ST text. Europe market
VT02	BG/DKK'	16k ROM VST - ST text. Asia market
VP01	BG/DKK' I,DK,I,BG	16k ROM VST - Philips text. Eastern Europe market
VP01	BG/DKK' I,DK,I,BG	16k ROM VST - Greek text. Europe market

1BIL 2BD 3B 4I 5DI 1
Standard

1	**BIL**	BG / I / LL'
2	**BD**	BG / DKK'
3	**B**	BG
4	**I**	I
5	**DI**	DK / I

ROM Defaut Value :
TX 807 Europe : 1BIL

FFI	- For TX807 Asia only. TX807 Europe : FFI = Off

IF SUB-MENU

AFC < x >
IFPL 00 - 7F 68
L'FA 00 - 7F 75
AGC 00 - 3F 19

IF

AFC
AFC Status display - Visualise l'état de AFC
AFC Status Display - Stato display AFC
Estado del CAF .

Display	AFC Status
< x . > / x < . >	Fosc. too low
< . x > / < . > x	Fosc. too high

IFPL	**IF PLL** adj. **VCO - 38.9MHz**
L'FA	**IF PLL** adjustment chassis (LL') **VCO 33.9MHz**

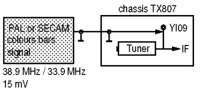

38.9 MHz / 33.9 MHz
15 mV

I - **IFPL**
Signal : PAL BG or SECAM L : 38.9 MHz / 15mV
- TV : Norm BG or L : Program Menu

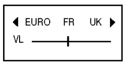

EURO : norm BG
FR : norm LL'

II - **L'FA** (For BGHILL' set)
Signal : SECAM L' : 33.9 MHz / 15mV
- TV : Norm L' : Program Menu

- Adjust IFPL (or L'FA) until the indicator (x) is within the brackets : **< x .>**.

- Régler IFPL ou L'FA pour que le curseur (x) soit dans la fenêtre AFC : **< x .>**.

- IFPL (oder L'FA) einstellen wenn der indikator (x) innerhalb der Klammern ist : **< x .>** .

- Regolare IFPL (o L'FA) in modo che l'indicatore (x) rimanga all'interno delle parentesi : **< x .>**.

- Ajustar IFPL (o L'FA) hasta que el cursor (x) esté entre los símbolos : **< x .>**.

ROM Defaut Value : IFPL : 3F - L'FA : 3F

AGC
- Minimum noise- Minimum de bruit
- Geräuschminimum - Rumore minimo
- Minimo ruido

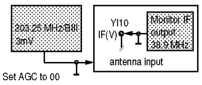

- Set AGC to 00
- Adjust AGC for maximum gain of IF signal.

ROM Defaut Value : AGC : 1F

GEOMETRY SUB-MENU

HSH 00 - 3F 45
VA50 00 - 3F 20
VA60 00 - 3F 36
VSH 00 - 3F 59

Test Bar pattern used : 4/3 with a geometric circle.
Mire utilisée : 4/3 avec un cercle de géométrie.
Benötigtes Testbid : 4/3 mit geometrischem Kreis.
Formato Testo utilizzato :4/3 con cerchio geometrico
Mira utilizada : 4/3 con circulo geometrico

GEOM

HSH	
VA 50	50 Hz
VA 60	60 Hz
VSH	

ROM Defaut Value :
HSH : 20
VA 50 : 18
VA 60 : 20
VSH : 1A

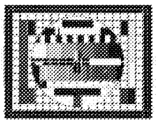

overscan V=107%

VIDEO SUB-MENU

RED 00 - 3F 45
GRN 00 - 3F 20
BLU 00 - 3F 36
PEAK <- +>

Perform the G2 and the Focus settings beforehand.
Effectuez au préalable les réglages de G2 et de focus.
Stellen Sie zuvor G2 und "Focus" ein.
Effetuare le regolazioni G2 e del Fuoco innanzitutto.
Efectuar previamente los ajustes de G2 y Foco.

VIDEO

RED* / **GRN*** / **BLU***	= 50% Grey scale test pattern white=100% weiβ, white

ROM Defaut Value :
RED : 1F
GRN : 1F
BLU : 1F

PEAK	**CRT Pin 6,8,11** **Oscillo. or colorimeter**	PEAK WHITE ADJUSTMENT = 50% = 100%

Sets	Nits	Vpp
14"	450	70
20"	490	-
21"	490	-

Notes :
* Adjust separate for PAL / SECAM and NTSC/AV
* Régler séparément pour PAL / SECAM et NTSC/AV
* Den Abgleich der Videowerte für PAL, SECAM, NTSC/AV getrennt durchführen.
* Regolare separatamente in PAL, SECAM, NTSC/AV.
* Realice los ajustes en PAL, SECAM, NTSC/AV por separado.

HOTEL MENU

HOTEL ON
MAX .... I ....

HOTEL

HOTEL	ON : Available Validation Vorhanden Opción activa Opzione attivata OFF: Not available Non validé Nicht vorhanden Opzione non attivata Opción inactiva
MAX	The hotel mode ("MAX") is used to keep the volume down and allow adjustments to the picture only. Le mode hotel (ligne "MAX") permet de limiter le volume et d'avoir accès seulement aux réglages image. Der Hotel-Modus ("MAX") wird nur verwendet, um die Lautstärke zu begrenzen und um Bildeinstellungen vorzunehmen. Il modo hotel ("MAX") consente di bloccare il volume e di accedere alla sola regolazione dell' immagine. El modo hotel ("MAX") permite mantener el volumen bajo y acceder solamente al ajuste de imagen

LOCATION OF CONTROLS - EMPLACEMENT DES REGLAGES - SERVICE LAGEPLAN - POSIZIONE REGULATORI DI SERVIZIO - SITUACIÓN DE LOS AJUSTES

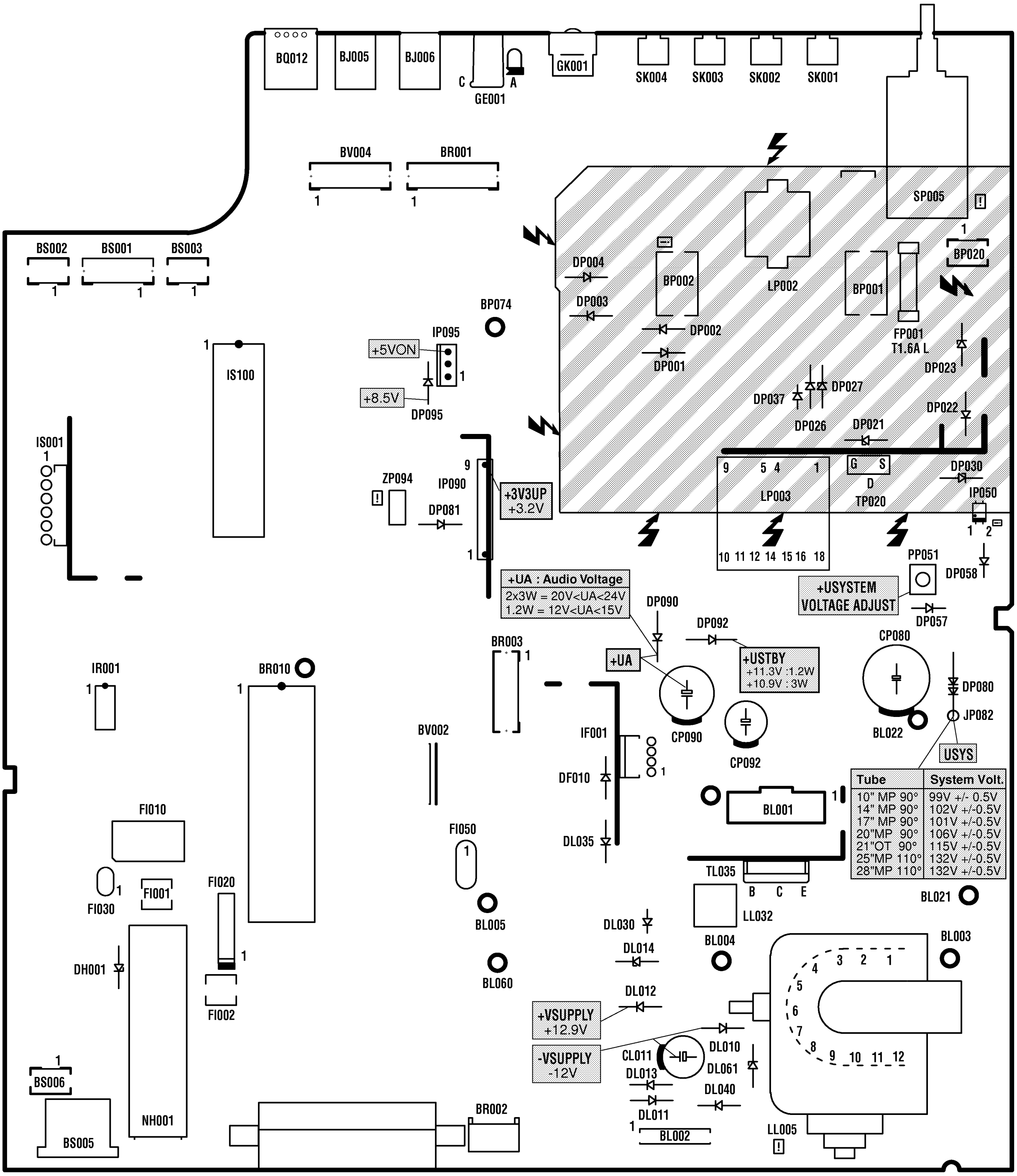

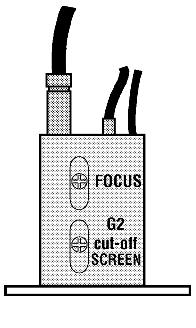

Part of board connected to mains supply.
Partie du châssis reliée au secteur.
Primärseite des Netzteils.
Parte dello chássis collegata alla rete.
Parte del chasis conectada a la red.

Use isolating mains transformer -
Utiliser un transformateur isolateur du secteur -
Trenntrafo verwenden -
Utilizar un transformador aislador de red -
Utilizzare un transformatore per isolarvi dalla rete

ADJUSTMENTS - REGLAGES - EINSTELLUNGEN - REGOLAZIONE - AJUSTES

U G2 / CUTOFF	LL05	Peak white pattern ◐ + ☼ + ◑ = 50%	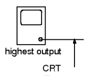 highest output CRT IB01: Pins 9 / 8 / 7	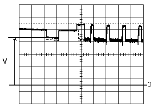 (see table below)
FOCUS	LL05	Coontrast = 100% Brightness = 0% Test pattern (standard values)		Sharp picture
MAIN SYSTEM VOLTAGE +USYS	PP051	◐ + ☼ + ◑ = 50% TV to AV : Black tes pattern AV	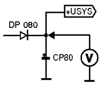	(see table below)

Tube	V Cut-off
10" MP 90°	125V +/- 3V
14" MP 90°	125V +/- 3V
17" MP 90°	140V +/- 3V
20" MP 90°	140V +/- 3V
21" MP 90°	140V +/- 3V
21" QT 90°	140V +/- 3V
25" MP110°	140V +/- 3V

Tube	Usys	RL090	JL981-982	JL991-992
10" MP 90°	99V +/- 0.5V	76k8	JL981	JL992
14" MP 90°	102V +/-0.5V	76k8	JL982	JL992
17" MP 90°	101V +/-0.5V	76k8	JL982	JL991
20"MP 90°	106V +/-0.5V	86k6	JL981	JL992
21"QT 90°	115V +/-0.5V	95k3	JL982	JL992
25"MP 110°	132V +/-0.5V	-	JL981	JL992
28"MP 110°	132V +/-0.5V	-	JL981	JL992

SERVICE-MODE (GB)

It is necessary to enter the Service Mode in order to carry out alignment of the TV set. Most adjustments can be made with the RCU, except the Focus and Screen voltages.

1. Service Mode Access

1.1 With the RCU, switch the TV set into the "**Standby**" mode.
1.2 Switch "**Off**" the TV set by mains supply switch (wait until LED is dark).
1.3 Whilst pressing the "**Magenta** (text)" button on the RCU switch "**On**" the TV set using the mains switch.
Continue to press the "**Magenta** (text)" button until the Service-setup Sub-menu appears.

ID 00.07	(1)
INIT ◁ ▷	(2)
STANDARD 00 0-03	(3)

2. Service Menu

2.1 Navigation

- Press the ⋀ / ⋁ buttons to select the menu line.
- Press the 《/》 buttons to make adjustments or selection of a menu item.

2.2 Service-Menu lines

Set-up lines (INIT,STANDARD,OSDCONTR) -
Geometry lines (HS,VS, VA, SC,VSH)
Video lines (CL, BLORS/BLORP,BLOGS/BLOGP,WPRS/WPRP,WPGS/WPGP, WPBS/WPBP, PWS/PWP, BKS, YD) -
IF lines (TOP) -
Video processor (CD0, CD1, SYN0, SYN1, DEF,VI0,VI1,SOUND,CONT0, CONT1,FEAT0).

2.3 Activation of a line :

The first line (1) is continuously displayed. Sequential selection of the others lines in the Service Menu is possible by pressing the ⋀ / ⋁ buttons on the RCU. The selected line will be highlighted in YELLOW text.

3. Alignment and storing new function value

3.1 The current value of the selected function is displayed in a hexadecimal form to the right of the function name. This value is adjusted by means of the RCU 《/》 buttons.
3.2 The values will be stored in the non-volatile memory when leaving the service menu.
3.3 To leave the Service menu press the "**Exit**" button on the RCU.

4. Temporary exit from Service Mode

4.1 To temporary leave the Service Mode, press the "**Exit**" button on the RCU. To access the everyday menus, press the "**Menu**" button on the RCU.
4.2 To return to the Service Menu, press the "**Magenta**" button on the RCU

5. Leaving the Service Mode

5.1 To **EXIT** the Service Menu either press, the "**Standby**" button on the RCU or switch "**Off**" the mains supply to the TV.

MODE SERVICE (F)

Le mode service sert au réglage de l'appareil. Toutes les opérations de réglage s'effectuent à l'aide de la télécommande (sauf les réglages de Focus et de tension de grille-écran).

1. Accès au mode service

1.1 Commuter le téléviseur en position de veille avec la télécommande.
1.2 Eteindre le téléviseur par l'interrupteur secteur (attendre l'extinction complète du voyant).
1.3 Maintenir la touche "**Magenta** (text)" enfoncée et mettre simultanément le teléviseur en marche avec l'interrupteur secteur.
Ne pas relacher la touche "**Magenta** (text)" jusqu'à apparition du menu

ID 00.07	(1)
INIT	(2)
STANDARD 00 0-03	(3)

2. Menu Service

2.1 Déplacement

- Appuyer sur la touche ⋀ / ⋁ pour sélectionner une ligne de menu.
- Appuyer sur la touche 《/》pour un réglage ou une sélection d'une option.

2.2 Lignes de Menus du mode service

Set-up lines (INIT,STANDARD,OSDCONTR) -
Geometry lines (HS,VS, VA, SC,VSH)
Video lines (CL, BLORS/BLORP,BLOGS/BLOGP,WPRS/WPRP,WPGS/WPGP, WPBS/WPBP, PWS/PWP, BKS, YD) - **IF lines** (TOP) -
Videoprocessor (CD0, CD1, SYN0, SYN1, DEF,VI0,VI1,SOUND,CONT0, CONT1,FEAT0).

2.3 Sélection d'une ligne:

La premières ligne (1) du menu est toujours affichée.
De courtes pressions sur la touche "⋀ / ⋁" sélectionnent séquentiellement les lignes (2) ou (3) du menu de service.
La ligne activée est de couleur jaune.

3. Réglage des fonctions sélectionnées; mémorisation

3.1 La valeur momentanée de la fonction sélectionnée est indiquée sous forme hexadécimale à droite, à coté de la position à régler et peut être modifiée avec la télécommande par la touche 《/》 .
3.2 La valeur de réglage est mémorisée dans la mémoire non volatile en sortie de mode service.
3.3 Appuyer sur la touche "**Exit**" pour sortir d'un sous-menu.

4. Sortie temporaire du mode service

4.1 Utiliser la touche "**Exit**" de la télécommande.
Le menu utilisateur peut-être accesible via la touche "**Menu**".
4.2 Pour entrer à nouveau dans le Menu Setup utiliser la touche magenta.

5. Sortie du mode service

5.1 Pour sortir du mode service, commuter le téléviseur en position de veille ou le mettre hors service par l'interrupteur secteur.

SERVICE-MODE (D)

Der Service-Mode wird für den Geräteabgleich benötigt. Alle Einstellungen erfolgen mit der Fernbedienung (bis auf Fokuseinstellung und Schirmgitterspannung).

1.Service-Mode einschalten

1.1 Mit der Fernbedienung das Fernsehgerät in Stand-by schalten.
1.2 Das Gerät mit dem Netzschalter ausschalten (warten bis LED dunkel ist)
1.3 Während Sie die margentafarbene Taste **(text)** auf der Fernbedienung gedrückt halten, schalten Sie das Gerät mit dem Netzschalter ein. Halten Sie die margentafarbene Taste solange gedrückt bis das Service Setup Sub-Menü erscheint.

ID 00.07	(1)
INIT	(2)
STANDARD 00 0-03	(3)

2. Service Menü

2.1 Navigation

-Drücken Sie die Tasten ⋀ / ⋁ zum Auswählen der Menüzeile.
-Drücken Sie die 《/》 -Tasten um eine Menüfunktion anzuwählen oder abzugleichen.

2.2 Service-Menü Zeilen

Set-up lines (INIT,STANDARD,OSDCONTR) -
Geometry lines (HS,VS, VA, SC,VSH)
Video lines (CL, BLORS/BLORP,BLOGS/BLOGP,WPRS/WPRP,WPGS/WPGP, WPBS/WPBP, PWS/PWP, BKS, YD) - **IF lines** (TOP) -
Videoprocessor (CD0, CD1, SYN0, SYN1, DEF,VI0,VI1,SOUND,CONT0, CONT1,FEAT0).

2.3 Aktivierung einer Menüzeile:

Die erste Zeile (1) wird ständig angezeigt. Die Anwahl der Zeilen (2) und (3) im Service-Menü ist durch Drücken der ⋀ / ⋁- Tasten möglich.
Die gewählte Zeile wird in gelber Farbe dargestellt.

3. Abgleich der gewählten Funktion und Speichern

3.1 Der momentane Wert der gewählten Funktion wird hexadezimal rechts neben der abzugleichenden Position angegeben und kann mit der Taste 《/》 auf der Fembedienung verändert werden.
3.2 Die Werte werden nach dem Verlassen des Service-Menüs im nichtflüchtigen Speicher (EEPROM) abgelegt.
3.3 Drücken Sie "**Exit**" zum Verlassen eines Service Sub-Menüs.

4. Vorübergehendes verlassen des Service-Mode

4.1 Auf der Fernbedienung Exit drücken.
Mit der Tasten Menü gelangen Sie zum Menü-Übersicht.
4.2 Durch Drücken der margentafarbenen Taste gelangen Sie in das Service Setup Sub-Menü.

5. Service-Mode verlassen

5.1 Zum Verlassen des Service-Mode das Gerät in Stand By schalten oder mit dem Netzschalter ausschalten.

MODO SERVICIO (E)

Se necesita el MODO SERVICIO para ajustar el aparato. Todos los ajustes se hacen con el mando a distancia (a excepción de la tensión del sistema, los ajustes del foco y las tensiones de la rejilla de pantalla).

1. Ajustar el Modo Servicio

1.1 Con el mando a distancia conectar a STANDBY el televisor.
1.2 Desconectar el aparato con el interruptor de la red (esperar hasta que el LED se apague).
1.3 Mientras mantiene pulsado el botón "**Magenta** (texto)" de la UCR, pulse el interruptor general de red para encender el televisor.
Mantenga pulsado el botón "**Magenta** (texto)" hasta que aparezca el submenú de la configuración del servicio.

ID 00.07	(1)
INIT	(2)
STANDARD 00 0-03	(3)

2. Menú Servicio.

2.1 Desplazamiento
- Pulse el botón ⋀ / ⋁ para seleccionar la línea del menú.
- Pulse el botón 《/》 para ajustar o seleccionar una opción del menú.

2.2 Líneas del menú del Modo Servicio
Set-up lines (INIT,STANDARD,OSDCONTR) -
Geometry lines (HS,VS, VA, SC,VSH)
Video lines (CL, BLORS/BLORP,BLOGS/BLOGP,WPRS/WPRP,WPGS/WPGP, WPBS/WPBP, PWS/PWP, BKS, YD) - **IF lines** (TOP) -
Videoprocessor (CD0, CD1, SYN0, SYN1, DEF,VI0,VI1,SOUND,CONT0, CONT1,FEAT0).

2.3 Activación de una línea :
La primera línea (1) se muestra siempre en la pantalla. La selección secuencial de las líneas (2) y (3), es posible pulsando las teclas ⋀ / ⋁.
La línea seleccionada es la que está en color amarillo

3. Ajuste de la función elegida y almacenamiento
3.1 El valor momentáneo de la función elegida es indicado de modo hexadecimal a la derecha, al lado de la posición a ajustar, y puede cambiarse con la tecla 《 o bien 》 en el mando a distancia.
3.2 Los valores serán memorizados en la EEPROM al salir del menú del Modo Servicio.
3.3 Pulse el botón "**Exit**" para salir de cualquier submenú Servicio.

4. Salida temporal del Modo Servicio
4.1 Pulse Salir en el mando a distancia.
Con el botón Menu puede acceder al menú de uso cotidiano.
4.2 Puede acceder al submenú de configuración del servicio mediante el botón "**Magenta**".

5. Salir del Modo Servicio
5.1 Conmute el aparato a STANDBY a fin de salir del MODO SERVICIO o desconectar con el interruptor de la red.

SERVICE-MODE (I)

Il Service-Mode è necessario per l'allineamento dell'apparecchio. Tutte le regolazioni si effettuano con il telecomando. (tranne le regolazionu del fuoco e le tensioni della griglia schermo).

1. Attivazione del Service-Mode

1.1 Commutare il televisore in stand-by con il telecomando.
1.2 Spegnere l'apparecchio con l'interruttore di rete (attendere finchè il LED è spento)
1.3 Mentre tenete premuto il pulsante "**Magenta** (testo)" del RCU, accendete il televisore utilizzando l'interruttore di rete. Continuate a premere il pulsante "**Magenta** (testo)" del RCU fino all'apparizione del Service Setup Sub Menu

ID 00.07	(1)
INIT	(2)
STANDARD 00 0-03	(3)

2. Service Menu

2.1 Navigazione

- Premere i tasti ⋀ / ⋁ per selezionare la linea del menu
- Premere i tasti 《/》 per la regolazione o la selezionz di un elemento del menu

2.2 Linee Service Menu

Set-up lines (INIT,STANDARD,OSDCONTR) -
Geometry lines (HS,VS, VA, SC,VSH)
Video lines (CL, BLORS/BLORP,BLOGS/BLOGP,WPRS/WPRP,WPGS/WPGP, WPBS/WPBP, PWS/PWP, BKS, YD) - **IF lines** (TOP) -
Videoprocessor (CD0, CD1, SYN0, SYN1, DEF,VI0,VI1,SOUND,CONT0, CONT1,FEAT0).

2.3 Attivazione di una linea :

La prima linea (1) è continuamente visualizzata. La selezione delle linee sucessive (2) o (3) è possibile in service menu premendo i tasi ⋀ / ⋁.
la linea selezionata sarà visualizzata di colore giallo.

3. Taratura della funzione scelta e memorizzazione

3.1 Il valore momentaneo della funzione scelta viene indicato in formato esadecimale a destra, accanto alla posizione da allineare e può essere cambiato con il pulsante 《/》 del telecomando.
3.2 I valori verranno memorizzati nella memoria num quando verrà lasciato il menù service mode.
3.3 Premere il tasto "**Exit**" per uscire da qualsiasi Service Sub Menu.

4. Uscita temporanea dal Service Mode

4.1 Premere Exit sul telecomando.
Al menu di uso quotidiano si accede attraverso il pulsante Menu.
4.2 Il Service Setup Sub Menu è accessibile attraverso il tasto "**Magenta**".

5. Disattivazione del Service-Mode

5.1 Per disattivare il Service Mode, commutare l'apparecchio in stand-by o spegnerlo con l'interruttore di rete.

ALIGNMENT PROCEDURE - PROCESSUS DE REGLAGES - ABGLEICH - VISUALIZZAZIONE DEL VALORE DI REGOLAZIONE - PROCEDIMIENTO DE ALINEACION

SET-UP LINES

ID 00.07		
INIT	◀ ▶	
STANDARD	00	0-03
OSDCONTR	07	0-0F
FR	00	

ID 00.07	Software code

INIT
Initialise TV set.
Sets all Service Mode functions stored in the EEprom to their default values.
See below the default values table.

⚠ "INIT" copy all service parameters from the ROM to EEprom. It will be necessary in this case to readjust most of the service mode functions.

⚠ "INIT" copie toutes les valeurs par défaut stockées en ROM vers l'EEprom.Il peut être nécessaire dans ce cas de reprendre la plupart des réglages du mode service.

⚠ "INIT" kopiert alle Service-Parameter aus dem ROM in das EEPROM. Es ist anschliessend notwendig die meisten Service-Funktionen neu abzugleichen

⚠ "INIT" copia tutti i parametri di servizio dalla ROM alla EEprom. Sarà necessario in seguito regolare alcune funzioni in Service Mode.

⚠ "INIT" copia todos los valores por defecto memorizados en la ROM hacia la EEPROM. Puede ser necesario en el caso de tener que reajustar la mayor parte de los ajustes en Modo Servicio

STANDARD
RF Norm Group Selection

00	EU	BG / LL'
01	FR	LL' / BG
02	UK	PAL I only
03	DK	DKK' PAL, SECAM

ROM Default Value :
TX 807 C / CS Europe : 00 EU

OSDCONTR **Full-page video text contrast**	factory Setting OSDCONTR = 03H

FR Factory Setting: FR=00H
Specific TX807C mono TDA9351N1.

00: FR is not available in progr. menus.
00 :FR non disponible dans le menu de programmation
00: FR ist im Prog. Menü nicht verfügbar
00: FR non è disponibile nel menu prog.
00 : FR no está disponible en el menú programación

V-Slope

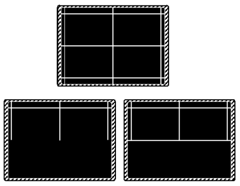

Correct   incorrect

GEOMETRY LINES*

HS	20	0-3F
VS	◀ **1A**	**0-3F** ▶
VA	20	0-3F
SC	10	0-3F
VSH	20	0-3F

HS

VS
V_Slope

- Apply a test pattern signal to the TV with a single horizontal and vertical line on the screen.
- Select the "**VS**" line of the menu. The bottom half of the screen will go black.
- Adjust VS until the centre line of the pattern is just invisible.
- Leave the line "**V_Slope**".
- Switch the test pattern signal to the crosshatch geometry pattern.
- Perform the geometry adjustments described below.

- Appliquer une mire de barres avec seulement une ligne blanche horizontale en milieu de l'écran.
- Sélectionner la ligne "**V-Slope**". La moitié basse de l'écran devient noire.
- Aligner "**V_Slope**" pour que la ligne médiane soit à peine non visible.
- Commuter la mire en mode de réglage de géométrie (quadrillage).
- Effectuer les reglages de geometrie ci- après.

- Speisen Sie ein Testbild mit einem horizontalen Strich in der Bildmitte ein.
- Wählen Sie im Menü die Funktion "V-Slope" an. Die untere Bildhälfte wird dunkel.
- Stellen Sie "V-Slope" so ein, daß die Mittellinie fast verschwindet.
- Verlassen Sie die Funktion "V-Slope".
- Speisen Sie ein Gittertestbild ein.
- Nehmen Sie die Geometrieeinstellungen wie nebenstehend beschrieben vor.

- Applicare un monoscopio con un'unica linea bianca orizzontale al centro dello schermo
- Selezionare la riga "**V slope**" del menu. La parte bassa dello schermo viene oscurata.
- Allineare la "Vertical Slope" in modo che la linea centrale sia appena visibile
- Abbandonare la riga "**V slope**".
- Posizionare il monoscopio
- Effettuare le regolazioni di geometria descritte in precedenza
- Memorizzare.

- Aplique una carta de ajuste con sólo una línea blanca horizontal y una vertical en el centro de la pantalla.
- Seleccionar en el menú, la línea "**V-Slope**". La mitad inferior de la pantalla se pondrá oscura.
- Ajuste "**V-Slope**" justo hasta que la línea horizontal sea invisible.
- Cambiar la carta de ajuste a "cuadricula" y efectuar los ajustes de geometria descritos a continuación
- Antes de salir, memorizar con "Store"

VA

SC
S-Correction — S

VSH

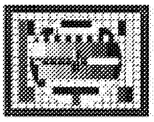

overscan :
V=107%
H=107%

VIDEO LINES

CL	◀ **00**	**0-0F** ▶		
BLORS*	08	0-0F		
BLOGS*	08	0-0F		
WPRS*	20	0-3F		
WPGS*	20	0-3F		
PWS*	20	20	20	0-3F
BKS*	ON	OFF-ON		
YD	08	0-0F		

CL
Cathode Level

Factory setting.
Extension of the peak White range.

Réglage usine.
Extension des valeurs de réglages du Peak White.

Factory Setting.
Extension of the peak White range.

Factory Setting.
Extension of the peak White range.

Ajuste de fábrica
Extensión del margen del Peak White.

Cutt-off **
BLORS / BLORP Black level offset Red SECAM/PAL
BLOGS / BLOGP Black level offset Green SECAM/PAL

☼ + ◑ + ◐ = 50%
Grey scale test pattern
white =100%
grey

Drive**
WPRS / WPRP White point Red SECAM/PAL
WPGS / WPGP White point Green SECAM/PAL
WPBS / WPBP White point Blue SECAM/PAL

☼ + ◑ + ◐ = 50%
Grey scale test pattern
white =100%
white

PWS / PWP**
Peak White SECAM/PAL

CRT
Pin 6,8,11
Oscillo. or colourimeter

☼ + ◑ + ◐ = 50%

Sets	Nits	Vpp
14"	450	70
20"	490	-
21"	490	-

BKS Black Stretch	factory Setting

YD
Luminance Delay
Use ⟨⟩ to adapt the image

**Perform the G2 and the Focus settings beforehand.*
Effectuez au préalable les réglages de G2 et de focus.
Stellen Sie zuvor G2 und "Focus" ein.
Effetuare le regolazioni G2 e del Fuoco innanzitutto.
Efectuar previamente los ajustes de G2 y Foco

** Adjust separate for PAL / SECAM
" S " : Video signal received is SECAM.
" P " : Video signal received is PAL.

IF LINES

TOP	◀ **20**	**0-0F** ▶

TOP
AGC - Take Over

- Minimum noise- Minimum de bruit
- Minimum Rauschen - Rumore minimo
- Minimo ruido

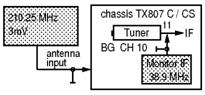

- Set TOP to 00
- Adjust TOP for maximum gain of IF signal.
- Reduce IF level about 8dB.

ROM Defaut Value : AGC : 20

VIDEO PROCESSOR LINES

CD0	84	0-FF
CD1	00	0-0F
SYN0	◀ **30**	**0-FF** ▶
SYN1	08	0-FF
DEF	00	0-0F
VI0	40	0-FF
VI1	00	0-0F
SOUND	00	0-FF
CONT0	46	0-FF
CONT1	00	0-0F
FEAT0	00	0-01

CD0 **CD1**	- Colour Decoder 0 = 84 - Colour Decoder 1 **mono sets: CD1 = 80H** **stereo sets: CD1 = 00H** Factory setting.
SYN0 **SYN1**	- Syncronisation 0 = 30 - Syncronisation 1 = 1C Factory setting.
DEF	- Deflection = 00 Factory setting.
VI0 **VI1**	- Vision IF 0 = 40 - Vision IF 1 = 00 Factory setting.
SOUND	- Sound = 00 Factory setting.
CONT0 **CONT0**	- Control 0 = 40 - Control 1 = 00 Factory setting.
FEAT0	- Features 0 = 00 Factory setting.

DEFAULT VALUES

OSD	DESCRIPTION	DEFAULT VALUE (HEX)
ID	Software	
INIT	Initialise TV set	
STANDARD	RF Norm Group Selection	0 (EU)
OSDCONTR	OSD Contrast	03
FR	France	00
HS	Horizontal shift	20
VS	Vertical Slope	1A
VA	Vertical Amplitude	20
SC	S-Correction	10
VSH	Vertical shift	20
CL	Cathode Level	00
BLORS	Black level offset Red SECAM	8
BLORP	Black level offset Red PAL	8
BLOGS	Black level offset Green SECAM	8
BLOGP	Black level offset Green SECAM	8
WPRS	White point Red SECAM	20
WPRP	White point Red PAL	20
WPGS	White point Green SECAM	20
WPGP	White point Green PAL	20
WPBS	White point Blue SECAM	20
WPBP	White point Blue PAL	20
PWS	Peak White SECAM	20
PWP	Peak White PAL	20
BKS	Black Stretch	01
YD	Luminance Delay	08
TOP	AGC take-over	20
CD0	Colour Decoder 0	84
CD1	Colour Decoder 1	Mono : 80 Stereo: 00
SYN0	Synchronisation 0	30
SYN1	Synchronisation 1	1C
DEF	Deflection	00
VI0	Vision IF 0	40
VI1	Vision IF 1	00
SOUND	Sound	00
CONT0	Control 0	40
CONT1	Control 1	00
FEAT0	Features 0	00

LOCATION OF CONTROLS - EMPLACEMENT DES REGLAGES - LAGEPLAN EINSTELLER - POSIZIONE REGULATORI DI SERVIZIO - SITUACIÓN DE LOS AJUSTES

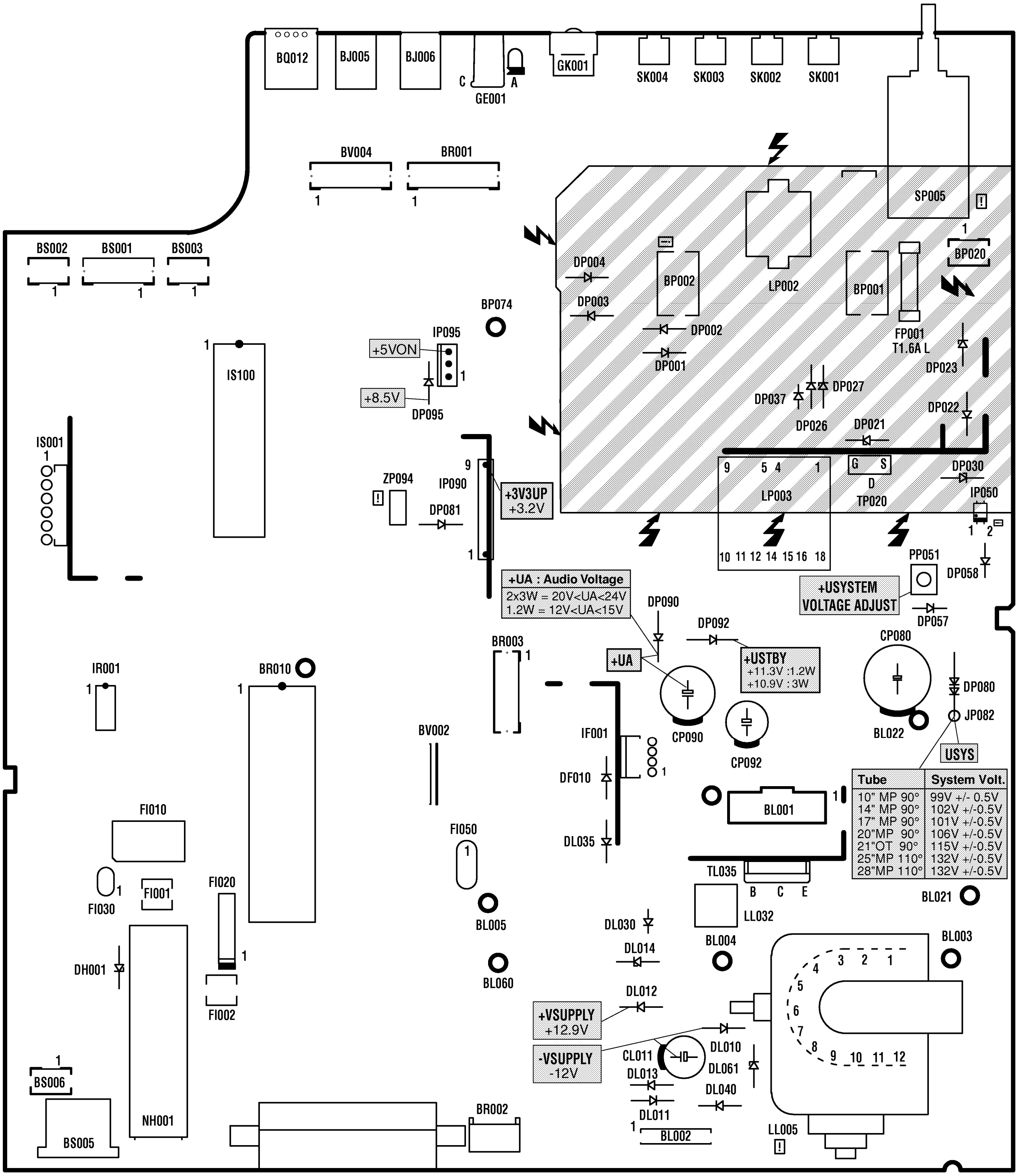

Tube	System Volt.
10" MP 90°	99V +/- 0.5V
14" MP 90°	102V +/-0.5V
17" MP 90°	101V +/-0.5V
20"MP 90°	106V +/-0.5V
21"OT 90°	115V +/-0.5V
25"MP 110°	132V +/-0.5V
28"MP 110°	132V +/-0.5V

Part of board connected to mains supply.
Partie du châssis reliée au secteur.
Primärseite des Netzteils.
Parte dello chássis collegata alla rete.
Parte del chasis conectada a la red

Use isolating mains transformer -
Utiliser un transformateur isolateur du secteur -
Trenntrafo verwenden -
Utilizar un transformador aislador de red -
Utilizzare un transformatore per isolarvi dalla rete

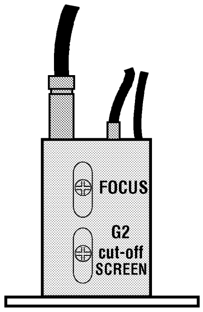

ADJUSTMENTS - REGLAGES - EINSTELLUNGEN - REGOLAZIONE - AJUSTES

U G2 / CUTOFF	LL05	Peak white pattern ◑ + ☼ + ◕ = 50%	highest output CRT IB01: Pins 9 / 8 / 7	140V: with IV001: TDA9554PS
FOCUS	LL05	Contrast = 100% Brightness = 0% Test pattern (standard values)		Sharp picture
MAIN **SYSTEM VOLTAGE** **+USYS**	PP051	◑ + ☼ + ◕ = 50% TV to AV : Black tes pattern AV		

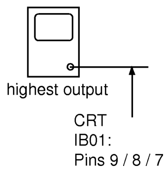

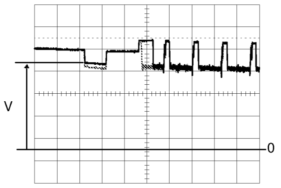

Tube	V Cutt-off
10" MP 90°	125V +/- 3V
14" MP 90°	125V +/- 3V
17" MP 90°	125V* +/- 3V
20" MP 90°	125V* +/- 3V
21" MP 90°	125V* +/- 3V
21" OT 90°	125V* +/- 3V
25" MP110°	125V* +/- 3V

140V: with IV001: TDA9554PS

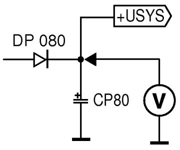

Tube	Usys	RL090	JL981-982	JL991-992
10" MP 90°	98V +/- 0.5V	76k8	JL981	JL992
14" MP 90°	101V +/-0.5V	76k8	JL982	JL992
17" MP 90°	101V +/-0.5V	76k8	JL982	JL991
20"MP 90°	106V +/-0.5V	86k6	JL981	JL992
21"OT 90°	114V +/-0.5V	95k3	JL982	JL992
25"MP 110°	132V +/-0.5V	127k	JL982	JL992
28"MP 110°	132V +/-0.5V	127k	JL982	JL992

EAST-WEST MODULE - MODULE EST-OUEST - OST-WEST-MODUL - MODULO EST-OVEST - MODULO ESTE-OESTE

GEOMETRY	TV : AV1 Test pattern Standard TV - Settings : ☼ + ◕ + ◑ = 50%		Correct picture
EWM	PL140 PL141 PL143 SERVICE MODE		

- (GB) - Please refer to geometry Mode alignment (110° tube) , page 7, to adjust the East West Module (EWM).
- (F) - Se référer à la méthode d'alignement des géometries (tubes 110°), page 7 pour effectuer les réglages du Module Est-Ouest (EWM).
- (D) - Abgleich des Ost-West-Modules: Siehe Geometrie-Abgleich (110°), Seite 7.
- (I) - Per le regolazioni del Modulo Est-Ovest fare riferimnto al modo allineamento geometria (tubi 110°), pagina 7.
- (E) - Para los ajustes del módulo Este-Oeste (EWM) ver la página 7, modo ajuste geometría (tubo 110º)

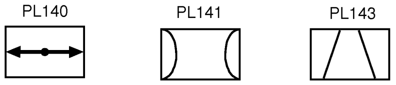

LOCATION OF CONTROLS - EMPLACEMENT DES REGLAGES - LAGEPLAN EINSTELLER - POSIZIONE REGULATORI DI SERVIZIO - SITUACIÓN DE LOS AJUSTES

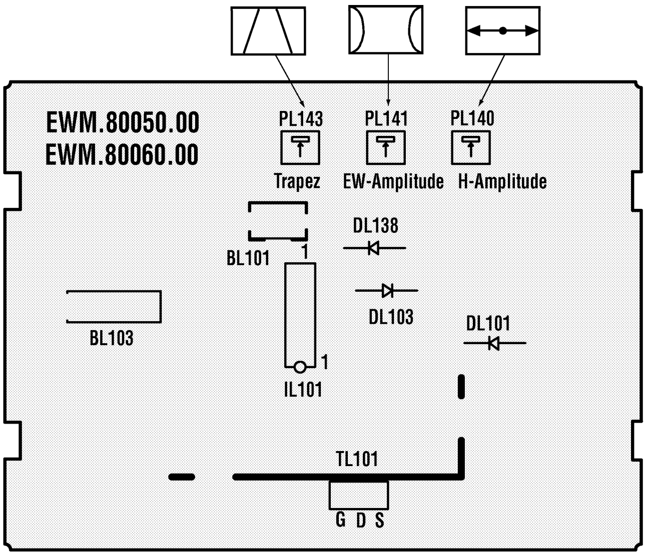

SERVICE-MODE (GB)

It is necessary to enter the Service Mode in order to carry out alignment of the TV set. Most adjustments can be made with the RCU, except the Focus and Screen voltages.

1. Service Mode Access

1.1 With the RCU, switch the TV set into the "**Standby**" mode.
1.2 Switch "**Off**" the TV set by mains supply switch (wait until LED is dark).
1.3 Whilst pressing the "**Magenta** (text)" button on the RCU switch "**On**" the TV set using the mains switch.
Continue to press the "**Magenta** (text)" button until the Service-setup Sub-menu appears.

ID 00.07	*(1)*
INIT ◁ ▷	*(2)*
STANDARD 00 0-03	*(3)*

2. Service Menu

2.1 Navigation

- Press the ⋀ / ⋁ buttons to select the menu line.
- Press the 《/》 buttons to make adjustments or selection of a menu item.

2.2 Service-Menu lines

Set-up lines (INIT,STANDARD,OSDCONTR) -
Geometry lines (HS,VS, VA, SC,VSH)
Video lines (CL, BLORS/BLORP,BLOGS/BLOGP,WPRS/WPRP,WPGS/WPGP, WPBS/WPBP, PWS/PWP, BKS, YD) -
IF lines (TOP) -
Video processor (CD0, CD1, SYN0, SYN1, DEF,VI0,VI1,SOUND,CONT0, CONT1,FEAT0).

2.3 Activation of a line :

The first line (1) is continuously displayed. Sequential selection of the others lines in the Service Menu is possible by pressing the ⋀ / ⋁ buttons on the RCU. The selected line will be highlighted in YELLOW text.

3. Alignment and storing new function value

3.1 The current value of the selected function is displayed in a hexadecimal form to the right of the function name. This value is adjusted by means of the RCU 《/》 buttons.
3.2 The values will be stored in the non-volatile memory when leaving the service menu.
3.3 To leave the Service menu press the "**Exit**" button on the RCU.

4. Temporary exit from Service Mode

4.1 To temporary leave the Service Mode, press the "**Exit**" button on the RCU. To access the everyday menus, press the "**Menu**" button on the RCU.
4.2 To return to the Service Menu, press the "**Magenta**" button on the RCU

5. Leaving the Service Mode

5.1 To **EXIT** the Service Menu either press, the "**Standby**" button on the RCU or switch "**Off**" the mains supply to the TV.

MODE SERVICE (F)

Le mode service sert au réglage de l'appareil. Toutes les opérations de réglage s'effectuent à l'aide de la télécommande (sauf les réglages de Focus et de tension de grille-écran).

1. Accès au mode service

1.1 Commuter le téléviseur en position de veille avec la télécommande.
1.2 Eteindre le téléviseur par l'interrupteur secteur (attendre l'extinction complète du voyant).
1.3 Maintenir la touche "**Magenta** (text)" enfoncée et mettre simultanément le téléviseur en marche avec l'interrupteur secteur.
Ne pas relacher la touche "**Magenta** (text)" jusqu'à apparition du menu

ID 00.07	*(1)*
INIT	*(2)*
STANDARD 00 0-03	*(3)*

2. Menu Service

2.1 Déplacement

- Appuyer sur la touche ⋀ / ⋁ pour sélectionner une ligne de menu.
- Appuyer sur la touche 《/》pour un réglage ou une sélection d'une option.

2.2 Lignes de Menus du mode service

Set-up lines (INIT,STANDARD,OSDCONTR) -
Geometry lines (HS,VS, VA, SC,VSH)
Video lines (CL, BLORS/BLORP,BLOGS/BLOGP,WPRS/WPRP,WPGS/WPGP, WPBS/WPBP, PWS/PWP, BKS, YD) - **IF lines** (TOP) -
Videoprocessor (CD0, CD1, SYN0, SYN1, DEF,VI0,VI1,SOUND,CONT0, CONT1,FEAT0).

2.3 Sélection d'une ligne:

La premières ligne (1) du menu est toujours affichée.
De courtes pressions sur la touche "⋀/ ⋁" sélectionnent séquentiellement les lignes (2) ou (3) du menu de service.
La ligne activée est de couleur jaune.

3. Réglage des fonctions sélectionnées; mémorisation

3.1 La valeur momentanée de la fonction sélectionnée est indiquée sous forme hexadécimale à droite, à coté de la position à régler et peut être modifiée avec la télécommande par la touche 《/》 .
3.2 La valeur de réglage est mémorisée dans la mémoire non volatile en sortie de mode service.
3.3 Appuyer sur la touche "**Exit**" pour sortir d'un sous-menu.

4. Sortie temporaire du mode service

4.1 Utiliser la touche "**Exit**" de la télécommande.
Le menu utilisateur peut-être accesible via la touche "**Menu**".
4.2 Pour entrer à nouveau dans le Menu Setup utiliser la touche magenta.

5. Sortie du mode service

5.1 Pour sortir du mode service, commuter le téléviseur en position de veille ou le mettre hors service par l'interrupteur secteur.

SERVICE-MODE (D)

Der Service-Mode wird für den Geräteabgleich benötigt. Alle Einstellungen erfolgen mit der Fernbedienung (bis auf Fokuseinstellung und Schirmgitterspannung).

1.Service-Mode einschalten

1.1 Mit der Fernbedienung das Fernsehgerät in Stand-by schalten.
1.2 Das Gerät mit dem Netzschalter ausschalten (warten bis LED dunkel ist)
1.3 Während Sie die margentafarbene Taste **(text)** auf der Fernbedienung gedrückt halten, schalten Sie das Gerät mit dem Netzschalter ein. Halten Sie die margentafarbene Taste solange gedrückt bis das Service Setup Sub-Menü erscheint.

```
ID 00.07                  (1)

INIT                      (2)
STANDARD    00  0-03      (3)
```

2. Service Menü

2.1 Navigation

-Drücken Sie die Tasten ⋀ / ⋁ zum Auswählen der Menüzeile.
-Drücken Sie die 《/》 -Tasten um eine Menüfunktion anzuwählen oder abzugleichen.

2.2 Service-Menü Zeilen

Set-up lines (INIT,STANDARD,OSDCONTR) -
Geometry lines (HS,VS, VA, SC,VSH)
Video lines (CL, BLORS/BLORP,BLOGS/BLOGP,WPRS/WPRP,WPGS/WPGP, WPBS/WPBP, PWS/PWP, BKS, YD) - **IF lines** (TOP) -
Videoprocessor (CD0, CD1, SYN0, SYN1, DEF,VI0,VI1,SOUND,CONT0, CONT1,FEAT0).

2.3 Aktivierung einer Menüzeile:

Die erste Zeile (1) wird ständig angezeigt. Die Anwahl der Zeilen (2) und (3) im Service-Menü ist durch Drücken der ⋀ / ⋁ - Tasten möglich.
Die gewählte Zeile wird in gelber Farbe dargestellt.

3. Abgleich der gewählten Funktion und Speichern

3.1 Der momentane Wert der gewählten Funktion wird hexadezimal rechts neben der abzugleichenden Position angegeben und kann mit der Taste 《/》 auf der Fembedienung verändert werden.
3.2 Die Werte werden nach dem Verlassen des Service-Menüs im nichtflüchtigen Speicher (EEPROM) abgelegt.
3.3 Drücken Sie "**Exit**" zum Verlassen eines Service Sub-Menüs.

4. Vorübergehendes verlassen des Service-Mode

4.1 Auf der Fernbedienung Exit drücken.
Mit der Tasten Menü gelangen Sie zum Menü-Übersicht.
4.2 Durch Drücken der margentafarbenen Taste gelangen Sie in das Service Setup Sub-Menü.

5. Service-Mode verlassen

5.1 Zum Verlassen des Service-Mode das Gerät in Stand By schalten oder mit dem Netzschalter ausschalten.

SERVICE-MODE (I)

Il Service-Mode è necessario per l'allineamento dell'apparecchio. Tutte le regolazioni si effettuano con il telecomando. (tranne le regolazionu del fuoco e le tensioni della griglia schermo).

1. Attivazione del Service-Mode

1.1 Commutare il televisore in stand-by con il telecomando.
1.2 Spegnere l'apparecchio con l'interruttore di rete (attendere finchè il LED è spento)
1.3 Mentre tenete premuto il pulsante "**Magenta** (testo)" del RCU, accendete il televisore utilizzando l'interruttore di rete. Continuate a premere il pulsante "**Magenta** (testo)" del RCU fino all'apparizione del Service Setup Sub Menu

```
ID 00.07                  (1)

INIT                      (2)
STANDARD    00  0-03      (3)
```

2. Service Menu

2.1 Navigazione

- Premere i tasti ⋀ / ⋁ per selezionare la linea del menu
- Premere i tasti 《/》 per la regolazione o la selezionz di un elemento del menu

2.2 Linee Service Menu

Set-up lines (INIT,STANDARD,OSDCONTR) -
Geometry lines (HS,VS, VA, SC,VSH)
Video lines (CL, BLORS/BLORP,BLOGS/BLOGP,WPRS/WPRP,WPGS/WPGP, WPBS/WPBP, PWS/PWP, BKS, YD) - **IF lines** (TOP) -
Videoprocessor (CD0, CD1, SYN0, SYN1, DEF,VI0,VI1,SOUND,CONT0, CONT1,FEAT0).

2.3 Attivazione di una linea :

La prima linea (1) è continuamente visualizzata. La selezione delle linee sucessive (2) o (3) è possibile in service menu premendo i tasi ⋀ / ⋁.
la linea selezionata sarà visualizzata di colore giallo.

3. Taratura della funzione scelta e memorizzazione

3.1 Il valore momentaneo della funzione scelta viene indicato in formato esadecimale a destra, accanto alla posizione da allineare e può essere cambiato con il pulsante 《/》 del telecomando.
3.2 I valori verranno memorizzati nella memoria num quando verrà lasciato il menù service mode.
3.3 Premere il tasto "**Exit**" per uscire da qualsiasi Service Sub Menu.

4. Uscita temporanea dal Service Mode

4.1 Premere Exit sul telecomando.
Al menu di uso quotidiano si accede attraverso il pulsante Menu.
4.2 Il Service Setup Sub Menu è accessibile attraverso il tasto "**Magenta**".

5. Disattivazione del Service-Mode

5.1 Per disattivare il Service Mode, commutare l'apparecchio in stand-by o spegnerlo con l'interruttore di rete.

MODO SERVICIO (E)

Se necesita el MODO SERVICIO para ajustar el aparato. Todos los ajustes se hacen con el mando a distancia (a excepción de la tensión del sistema, los ajustes del foco y las tensiones de la rejilla de pantalla).

1. Ajustar el Modo Servicio

1.1 Con el mando a distancia conectar a STANDBY el televisor.
1.2 Desconectar el aparato con el interruptor de la red (esperar hasta que el LED se apague).
1.3 Mientras mantiene pulsado el botón "**Magenta** (texto)" de la UCR, pulse el interruptor general de red para encender el televisor.
Mantenga pulsado el botón "**Magenta** (texto)" hasta que aparezca el submenú de la configuración del servicio.

```
ID 00.07                  (1)

INIT                      (2)
STANDARD    00  0-03      (3)
```

2. Menú Servicio.

2.1 Desplazamiento
- Pulse el botón ⋀ / ⋁ para seleccionar la línea del menú.
- Pulse el botón 《/》 para ajustar o seleccionar una opción del menú.

2.2 Líneas del menú del Modo Servicio
Set-up lines (INIT,STANDARD,OSDCONTR) -
Geometry lines (HS,VS, VA, SC,VSH)
Video lines (CL, BLORS/BLORP,BLOGS/BLOGP,WPRS/WPRP,WPGS/WPGP, WPBS/WPBP, PWS/PWP, BKS, YD) - **IF lines** (TOP) -
Videoprocessor (CD0, CD1, SYN0, SYN1, DEF,VI0,VI1,SOUND,CONT0, CONT1,FEAT0).

2.3 Activación de una línea :
La primera línea (1) se muestra siempre en la pantalla. La selección secuencial de las líneas (2) y (3), es posible pulsando las teclas ⋀ / ⋁ .
La línea seleccionada es la que está en color amarillo

3. Ajuste de la función elegida y almacenamiento
3.1 El valor momentáneo de la función elegida es indicado de modo hexadecimal a la derecha, al lado de la posición a ajustar, y puede cambiarse con la tecla 《 o bien 》 en el mando a distancia.
3.2 Los valores serán memorizados en la EEPROM al salir del menú del Modo Servicio.
3.3 Pulse el botón "**Exit**" para salir de cualquier submenú Servicio.

4. Salida temporal del Modo Servicio
4.1 Pulse Salir en el mando a distancia.
Con el botón Menu puede acceder al menú de uso cotidiano.
4.2 Puede acceder al submenú de configuración del servicio mediante el botón "**Magenta**".

5. Salir del Modo Servicio
5.1 Conmute el aparato a STANDBY a fin de salir del MODO SERVICIO o desconectar con el interruptor de la red.

ALIGNMENT PROCEDURE - PROCESSUS DE REGLAGES - ABGLEICH - VISUALIZZAZIONE DEL VALORE DI REGOLAZIONE - PROCEDIMIENTO DE ALINEACION

SET-UP LINES

ID 02.11		
INIT		
STANDARD*	00	0-03
KEY	◀ **OFF**	**OFF-ON** ▶
OSDCONTR	03	0-0F
WBF-R*	88	0-FF
SOC1-0	2F	0-3F
OIFP**	20	0-3F

ID 00.07

INIT
Initialise TV set.
Sets all Service Mode functions stored in the EEprom to their default values.
See below the default values table.

⚠ "INIT" copy all service parameters from the ROM to EEprom. It will be necessary in this case to readjust most of the service mode functions.

⚠ "INIT" copie toutes les valeurs par défaut stockées en ROM vers l'EEprom.Il peut être nécessaire dans ce cas de reprendre la plupart des réglages du mode service.

⚠ "INIT" kopiert alle Service-Parameter aus dem ROM in das EEPROM. Es ist anschliessend notwendig die meisten Service-Funktionen neu abzugleichen

⚠ "INIT" copia tutti i parametri di servizio dalla ROM alla EEprom. Sarà necessario in seguito regolare alcune funzioni in Service Mode.

⚠ "INIT" copia todos los valores por defecto memorizados en la ROM hacia la EEPROM. Puede ser necesario en el caso de tener que reajustar la mayor parte de los ajustes en Modo Servicio

STANDARD
RF Norm Group Selection

00	**EU**	BG / LL'
01	**FR**	LL' / BG
02	**UK**	PAL I only
03	**DK**	DKK' PAL, SECAM

ROM Default Value :
TX 807 C / CS Europe : 00 EU

KEY	Key lock ON,OFF... Default value : OFF
OSDCONTR **Full-page video text contrast**	factory Setting OSDCONTR = 03H
WBF-R* **Timing of "wide blanking"**	factory Setting WBF-R = 88H
SOC1-0 **Peak White Limiting**	Specific TDA9554PS (UOC-N2) factory Setting SOC1=2FH
OIF **Offset IF demodulator**	Specific TDA9554PS (UOC-N2) factory Setting OIF=20H

V-Slope

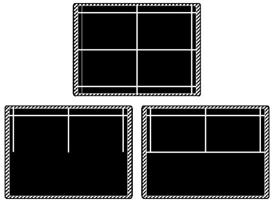

GEOMETRY LINES*

HS	20	0-3F
VS	◀ **1A**	**0-3F** ▶
VA	20	0-3F
SC	10	0-3F
VSH	20	0-3F

HS

VS
V_Slope

- Apply a test pattern signal to the TV with a single horizontal and vertical line on the screen.
- Select the "**VS**" line of the menu. The bottom half of the screen will go black.
- Adjust VS until the centre line of the pattern is just invisible.
- Leave the line "**V_Slope**".
- Switch the test pattern signal to the crosshatch geometry pattern.
- Perform the geometry adjustments described below.

- Appliquer une mire de barres avec seulement une ligne blanche horizontale en milieu de l'écran.
- Sélectionner la ligne "**V-Slope**". La moitié basse de l'écran devient noire.
- Aligner "**V_Slope**" pour que la ligne médiane soit à peine non visible.
- Commuter la mire en mode de réglage de géométrie (quadrillage).
- Effectuer les reglages de geometrie ci- après.

- Speisen Sie ein Testbild mit einem horizontalen Strich in der Bildmitte ein.
- Wählen Sie im Menü die Funktion "V-Slope" an. Die untere Bildhälfte wird dunkel.
- Stellen Sie "V-Slope" so ein, daß die Mittellinie fast verschwindet.
- Verlassen Sie die Funktion "V-Slope".
- Speisen Sie ein Gittertestbild ein.
- Nehmen Sie die Geometrieeinstellungen wie nebenstehend beschrieben vor.

- Applicare un monoscopio con un'unica linea bianca orizzontale al centro dello schermo
- Selezionare la riga "**V slope**" del menu. La parte bassa dello schermo viene oscurata.
- Allineare la "Vertical Slope" in modo che la linea centrale sia appena visibile
- Abbandonare la riga "**V slope**".
- Posizionare il monoscopio
- Effettuare le regolazioni di geometria descritte in precedenza
- Memorizzare.

- Aplique una carta de ajuste con sólo una línea blanca horizontal y una vertical en el centro de la pantalla.
- Seleccionar en el menú, la línea "**V-Slope**". La mitad inferior de la pantalla se pondrá oscura.
- Ajuste "**V-Slope**" justo hasta que la línea horizontal sea invisible.
- Cambiar la carta de ajuste a "cuadrícula" y efectuar los ajustes de geometria descritos a continuación.
- Antes de salir, memorizar con "Store"

VA

SC
S-Correction

S

VSH

* According to software version.
** " S " : Video signal received is SECAM.
" P " : Video signal received is PAL.

VIDEO LINES

CL	◀ **00**	**0-0F** ▶		
BLORS*	08	0-0F		
BLOGS*	08	0-0F		
WPRS*	20	0-3F		
WPGS*	20	0-3F		
WPBS*	20	0-3F		
PWS*	20	20	20	0-3F
BKS*	ON	OFF-ON		
YD	08	0-0F		

CL **Cathode Level**	Factory setting. Extension of the peak White range. Réglage usine. Extension des valeurs de réglages du Peak White. Fabrik-Einstellung (Umfang des Spitzenweiß Ein-bereiches) Factory Setting. Extension of the peak White range. Ajuste de fábrica Extensión del margen del Peak White.	
Cut-off ** **BLORS / BLORP** **Black Level Offset Red SECAM/PAL** **BLOGS / BLOGP** **Black Level Offset Green SECAM/PAL**		= 50% Grey scale test pattern white =100% grey
Drive** **WPRS / WPRP** **White Point Red SECAM/PAL** **WPGS / WPGP** **White Point Green SECAM/PAL** **WPBS / WPBP** **White Point Blue SECAM/PAL**		= 50% Grey scale test pattern white =100% white
PWS / PWP** **Peak White SECAM/PAL**	= 50% colourimeter	
BKS **Black Stretch**	Factory Setting	
YD **Luminance Delay**		Use ◁▷ to adapt the image

Sets	Nits	Sets	Nits
10"	500	21"OT	420
14"	450	21"MP 90°	450
17"	450	25"MP 110°	400
20"FB	450	28"MP 110°	300

**Perform the G2 and the Focus settings beforehand.*
Effectuez au préalable les réglages de G2 et de focus.
Stellen Sie zuvor G2 und "Focus" ein.
Effetuare le regolazioni G2 e del Fuoco innanzitutto.
Efectuar previamente los ajustes de G2 y Foco

** Adjust separate for PAL / SECAM
" S " : Video signal received is SECAM.
" P " : Video signal received is PAL.

IF LINES

TOP	◀ **20**	**0-0F** ▶
FFI	**00**	**0-01**
ACL*	**00**	**0-01**

TOP
AGC - Take Over

- Minimum noise- Minimum de bruit
- Minimum Rauschen - Rumore minimo
- Minimo ruido

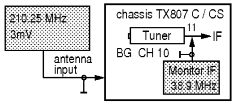

- Set TOP to 00
- Adjust TOP for maximum gain of IF signal.
- Reduce IF level about 8dB.

ROM Defaut Value : AGC : 20

FFI* **Fast Filter** **IF-PLL**	Fast Filter (IF / PLL) Filtre rapide (FI / PLL) Schnelles Filter (ZF / PLL) Filtro /rapido (IF / PLL) 00 : Europ Factory Setting.
ACL* **Automatic Colour limiting**	Factory Setting. ACL=00

VIDEO PROCESSOR LINES

CD0	84	0-FF
CD1	00	0-0F
SYN0	◀ **30**	**0-FF** ▶
SYN1	08	0-FF
DEF	00	0-0F
VI0	00	0-0F
VI1	00	0-0F
SOUND	00	0-FF
CONT0	46	0-FF
CONT1	00	0-0F
SOUND1	00	0-FF
FEAT0	00	0-01
FEAT1	00	0-01
LOCK	00	0-01
LIMIT	00	0-01

CD0 **CD1**	- Colour Decoder 0 = 84 - Colour Decoder 1 **mono sets: CD1 = 80H** **stereo sets: CD1 = 00H** Factory Setting.
SYN0 **SYN1**	- Syncronisation 0 = 30 - Syncronisation 1 = 1C Factory Setting.
DEF	- Deflection = 00 Factory Setting.
VI0 **VI1**	- Vision IF 0 = 40 - Vision IF 1 = 00 Factory Setting.
SOUND	- Sound = 00 Factory Setting.
CONT0 **CONT0**	- Control 0 = 40 - Control 1 = 00 Factory Setting.
FEAT0	- Features 0 = 00 Factory Setting.

* According to software version.

DEFAULT VALUES

OSD	DESCRIPTION	DEFAULT VALUE (HEX)
ID	Software	
INIT	Initialise TV set	
STANDARD	RF Norm Group Selection	0 (EU)
KEY	Key Lock	OFF
OSDCONTR	OSD Contrast	03
WBF-R	Timing of wide blanking	88
SOC1-0	Peak White Limiting	08
OIFS	Offset IF demodulator	20
FR	France	00
HS	Horizontal Shift	20
VS	Vertical Slope	1A
VA	Vertical Amplitude	20
SC	S-Correction	10
VSH	Vertical Shift	20
CL	Cathode Level	00
BLORS	Black Level Offset Red SECAM	8
BLORP	Black Level Offset Red PAL	8
BLOGS	Black Level Offset Green SECAM	8
BLOGP	Black Level Offset Green SECAM	8
WPRS	White Point Red SECAM	20
WPRP	White Point Red PAL	20
WPGS	White Point Green SECAM	20
WPGP	White Point Green PAL	20
WPBS	White Point Blue SECAM	20
WPBP	White Point Blue PAL	20
PWS	Peak White SECAM	20
PWP	Peak White PAL	20
BKS	Black Stretch	01
YD	Luminance Delay	08
TOP	AGC Take-Over	20
FFI	Fast Filter IF-PLL	00
ACL	Automatic Colour limiting	00
CD0	Colour Decoder 0	84
CD1	Colour Decoder 1	Mono : 80 Stereo: 00
SYN0	Synchronisation 0	30
SYN1	Synchronisation 1	1C
DEF	Deflection	00
VI0	Vision IF 0	40
VI1	Vision IF 1	00
SOUND	Sound	00
CONT0	Control 0	40
CONT1	Control 1	00
FEAT0	Features 0	00

GEOMETRY MODE ALIGNMENT

90° tube

Signal : 50 Hz - 4/3 test pattern

4 / 3 **standard mode**	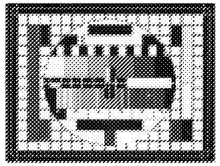	**Overscan V=107% , H=107%** 1 - Adjust Horizontal Centering (HS) 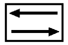 2 - Adjust Vertical centering (VSH) and Vertical amplitude 107% (VA) 3 - Adjust Vertical Slope (VS) and linearity (SC) 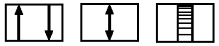 4-If necessary repeat VSH, VA alignment to 7% overscan.

110° tube

Signal : 50 Hz - 4/3 test pattern

4 / 3 **standard mode**	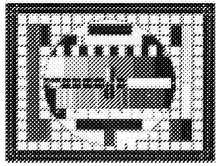	**Overscan V=107% , H=107%** **EAST-WEST MODULE** 1 - **PL140** : Turn fully counterclockwise. **MAIN BOARD** 2 - Adjust Horizontal Centering (HS) 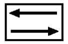 3 - Adjust Vertical centering (VSH) and Vertical amplitude 107% (VA) 4 - Adjust Vertical Slope (VS) and linearity (SC) 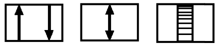 5 - If necessary repeat VSH, VA alignment to 7% overscan. **EAST-WEST MODULE** 6 - **PL140** : Adjust Horizontal amplitude with PL140 for optimum oversc 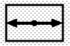 7 - **PL141** :Adjust Pincushion. 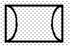 8 - **PL143** : Adjust Trapezium 9 -If necessary repeat Horizontal amplitude, pincushion correction and trapezium alignment

LOCATION OF CONTROLS - EMPLACEMENT DES REGLAGES - LAGEPLAN EINSTELLER - POSIZIONE REGULATORI DI SERVIZIO - SITUACIÓN DE LOS AJUSTES

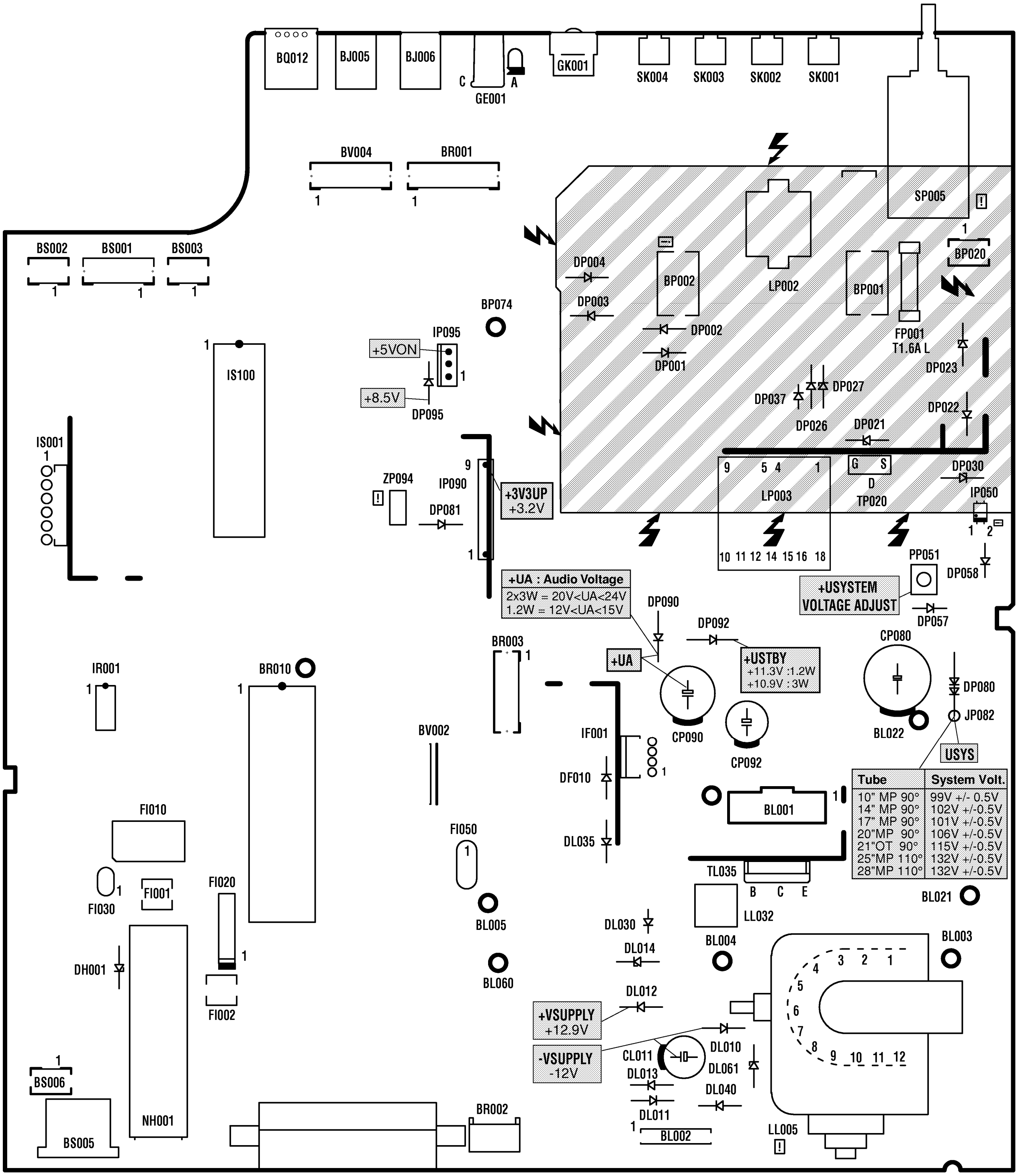

Tube	System Volt.
10" MP 90°	99V +/- 0.5V
14" MP 90°	102V +/-0.5V
17" MP 90°	101V +/-0.5V
20"MP 90°	106V +/-0.5V
21"OT 90°	115V +/-0.5V
25"MP 110°	132V +/-0.5V
28"MP 110°	132V +/-0.5V

Part of board connected to mains supply.
Partie du châssis reliée au secteur.
Primärseite des Netzteils.
Parte dello chássis collegata alla rete.
Parte del chasis conectada a la red

Use isolating mains transformer -
Utiliser un transformateur isolateur du secteur -
Trenntrafo verwenden -
Utilizar un transformador aislador de red -
Utilizzare un transformatore per isolarvi dalla rete

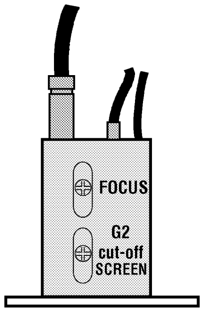

ADJUSTMENTS - REGLAGES - EINSTELLUNGEN - REGOLAZIONE - AJUSTES

U G2 / CUTOFF — LL05

Peak white pattern

◑ + ☼ + ◕ = 50%

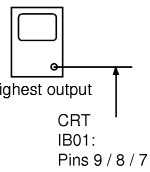

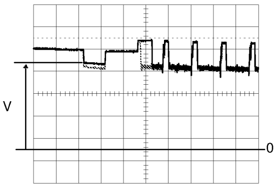

Tube	V Cutt-off
10" MP 90°	125V +/- 3V
14" MP 90°	125V +/- 3V
17" MP 90°	125V* +/- 3V
20" MP 90°	125V* +/- 3V
21" MP 90°	125V* +/- 3V
21" OT 90°	125V* +/- 3V
25" MP110°	125V* +/- 3V

140V: with IV001: TDA9554PS

FOCUS — LL05

Contrast = 100%
Brightness = 0%
Test pattern
(standard values)

Sharp picture

MAIN

SYSTEM VOLTAGE

+USYS — PP051

◑ + ☼ + ◕ = 50%

TV to AV : Black tes pattern

AV

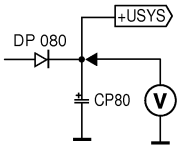

Tube	Usys	RL090	JL981-982	JL991-992
10" MP 90°	98V +/- 0.5V	76k8	JL981	JL992
14" MP 90°	101V +/-0.5V	76k8	JL982	JL992
17" MP 90°	101V +/-0.5V	76k8	JL982	JL991
20"MP 90°	106V +/-0.5V	86k6	JL981	JL992
21"OT 90°	114V +/-0.5V	95k3	JL982	JL992
25"MP 110°	132V +/-0.5V	127k	JL982	JL992
28"MP 110°	132V +/-0.5V	127k	JL982	JL992

EAST-WEST MODULE - MODULE EST-OUEST - OST-WEST-MODUL - MODULO EST-OVEST - MODULO ESTE-OESTE

GEOMETRY

TV : AV1 Test pattern
Standard TV - Settings :
☼ + ◕ + ◑ = 50%

Correct picture

EWM

PL140
PL141
PL143
SERVICE MODE

GB - Please refer to geometry Mode alignment (110° tube) , page 7, to adjust the East West Module (EWM).

F - Se référer à la méthode d'alignement des géometries (tubes 110°), page 7 pour effectuer les réglages du Module Est-Ouest (EWM).

D - Abgleich des Ost-West-Modules: Siehe Geometrie-Abgleich (110°), Seite 7.

I - Per le regolazioni del Modulo Est-Ovest fare riferimnto al modo allineamento geometria (tubi 110°), pagina 7.

E - Para los ajustes del módulo Este-Oeste (EWM) ver la página 7, modo ajuste geometría (tubo 110º)

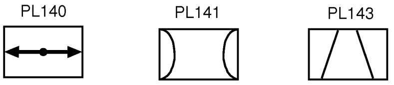

LOCATION OF CONTROLS - EMPLACEMENT DES REGLAGES - LAGEPLAN EINSTELLER - POSIZIONE REGULATORI DI SERVIZIO - SITUACIÓN DE LOS AJUSTES

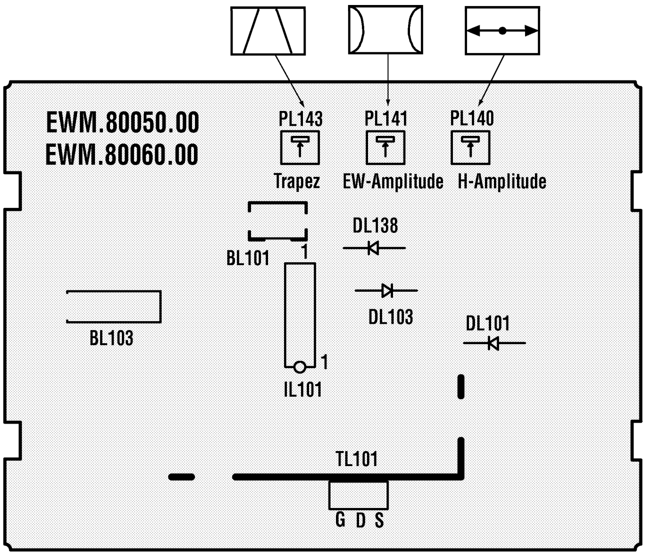

SERVICE-MODE (GB)

It is necessary to enter the Service Mode in order to carry out alignment of the TV set. Most adjustments can be made with the RCU, except the Focus and Screen voltages.

1. Service Mode Access

1.1 With the RCU, switch the TV set into the "**Standby**" mode.
1.2 Switch "**Off**" the TV set by mains supply switch (wait until LED is dark).
1.3 Whilst pressing the "**Magenta** (text)" button on the RCU switch "**On**" the TV set using the mains switch.
Continue to press the "**Magenta** (text)" button until the Service-setup Sub-menu appears.

ID 00.07	*(1)*
INIT ⊲ ⊳	*(2)*
STANDARD 00 0-03	*(3)*

2. Service Menu

2.1 Navigation

- Press the ∧ / ∨ buttons to select the menu line.
- Press the 《/》 buttons to make adjustments or selection of a menu item.

2.2 Service-Menu lines

Set-up lines (INIT,STANDARD,OSDCONTR) -
Geometry lines (HS,VS, VA, SC,VSH)
Video lines (CL, BLORS/BLORP,BLOGS/BLOGP,WPRS/WPRP,WPGS/WPGP, WPBS/WPBP, PWS/PWP, BKS, YD) -
IF lines (TOP) -
Video processor (CD0, CD1, SYN0, SYN1, DEF,VI0,VI1,SOUND,CONT0, CONT1,FEAT0).

2.3 Activation of a line :

The first line (1) is continuously displayed. Sequential selection of the others lines in the Service Menu is possible by pressing the ∧ / ∨ buttons on the RCU. The selected line will be highlighted in YELLOW text.

3. Alignment and storing new function value

3.1 The current value of the selected function is displayed in a hexadecimal form to the right of the function name. This value is adjusted by means of the RCU 《/》 buttons.
3.2 The values will be stored in the non-volatile memory when leaving the service menu.
3.3 To leave the Service menu press the "**Exit**" button on the RCU.

4. Temporary exit from Service Mode

4.1 To temporary leave the Service Mode, press the "**Exit**" button on the RCU. To access the everyday menus, press the "**Menu**" button on the RCU.
4.2 To return to the Service Menu, press the "**Magenta**" button on the RCU

5. Leaving the Service Mode

5.1 To **EXIT** the Service Menu either press, the "**Standby**" button on the RCU or switch "**Off**" the mains supply to the TV.

MODE SERVICE (F)

Le mode service sert au réglage de l'appareil. Toutes les opérations de réglage s'effectuent à l'aide de la télécommande (sauf les réglages de Focus et de tension de grille-écran).

1. Accès au mode service

1.1 Commuter le téléviseur en position de veille avec la télécommande.
1.2 Eteindre le téléviseur par l'interrupteur secteur (attendre l'extinction complète du voyant).
1.3 Maintenir la touche "**Magenta** (text)" enfoncée et mettre simultanément le téléviseur en marche avec l'interrupteur secteur.
Ne pas relacher la touche "**Magenta** (text)" jusqu'à apparition du menu

ID 00.07	*(1)*
INIT	*(2)*
STANDARD 00 0-03	*(3)*

2. Menu Service

2.1 Déplacement

- Appuyer sur la touche ∧ / ∨ pour sélectionner une ligne de menu.
- Appuyer sur la touche 《/》pour un réglage ou une sélection d'une option.

2.2 Lignes de Menus du mode service

Set-up lines (INIT,STANDARD,OSDCONTR) -
Geometry lines (HS,VS, VA, SC,VSH)
Video lines (CL, BLORS/BLORP,BLOGS/BLOGP,WPRS/WPRP,WPGS/WPGP, WPBS/WPBP, PWS/PWP, BKS, YD) - **IF lines** (TOP) -
Videoprocessor (CD0, CD1, SYN0, SYN1, DEF,VI0,VI1,SOUND,CONT0, CONT1,FEAT0).

2.3 Sélection d'une ligne:

La premières ligne (1) du menu est toujours affichée.
De courtes pressions sur la touche "∧ / ∨" sélectionnent séquentiellement les lignes (2) ou (3) du menu de service.
La ligne activée est de couleur jaune.

3. Réglage des fonctions sélectionnées; mémorisation

3.1 La valeur momentanée de la fonction sélectionnée est indiquée sous forme hexadécimale à droite, à coté de la position à régler et peut être modifiée avec la télécommande par la touche 《/》 .
3.2 La valeur de réglage est mémorisée dans la mémoire non volatile en sortie de mode service.
3.3 Appuyer sur la touche "**Exit**" pour sortir d'un sous-menu.

4. Sortie temporaire du mode service

4.1 Utiliser la touche "**Exit**" de la télécommande.
Le menu utilisateur peut-être accesible via la touche "**Menu**".
4.2 Pour entrer à nouveau dans le Menu Setup utiliser la touche magenta.

5. Sortie du mode service

5.1 Pour sortir du mode service, commuter le téléviseur en position de veille ou le mettre hors service par l'interrupteur secteur.

SERVICE-MODE (D)

Der Service-Mode wird für den Geräteabgleich benötigt. Alle Einstellungen erfolgen mit der Fernbedienung (bis auf Fokuseinstellung und Schirmgitterspannung).

1.Service-Mode einschalten

1.1 Mit der Fernbedienung das Fernsehgerät in Stand-by schalten.
1.2 Das Gerät mit dem Netzschalter ausschalten (warten bis LED dunkel ist)
1.3 Während Sie die margentafarbene Taste **(text)** auf der Fernbedienung gedrückt halten, schalten Sie das Gerät mit dem Netzschalter ein. Halten Sie die margentafarbene Taste solange gedrückt bis das Service Setup Sub-Menü erscheint.

ID 00.07	*(1)*
INIT	*(2)*
STANDARD 00 0-03	*(3)*

2. Service Menü

2.1 Navigation

-Drücken Sie die Tasten ∧ / ∨ zum Auswählen der Menüzeile.
-Drücken Sie die 〈/〉 -Tasten um eine Menüfunktion anzuwählen oder abzugleichen.

2.2 Service-Menü Zeilen

Set-up lines (INIT,STANDARD,OSDCONTR) -
Geometry lines (HS,VS, VA, SC,VSH)
Video lines (CL, BLORS/BLORP,BLOGS/BLOGP,WPRS/WPRP,WPGS/WPGP, WPBS/WPBP, PWS/PWP, BKS, YD) - **IF lines** (TOP) -
Videoprocessor (CD0, CD1, SYN0, SYN1, DEF,VI0,VI1,SOUND,CONT0, CONT1,FEAT0).

2.3 Aktivierung einer Menüzeile:

Die erste Zeile (1) wird ständig angezeigt. Die Anwahl der Zeilen (2) und (3) im Service-Menü ist durch Drücken der ∧ / ∨ - Tasten möglich.
Die gewählte Zeile wird in gelber Farbe dargestellt.

3. Abgleich der gewählten Funktion und Speichern

3.1 Der momentane Wert der gewählten Funktion wird hexadezimal rechts neben der abzugleichenden Position angegeben und kann mit der Taste 〈/〉 auf der Fembedienung verändert werden.
3.2 Die Werte werden nach dem Verlassen des Service-Menüs im nichtflüchtigen Speicher (EEPROM) abgelegt.
3.3 Drücken Sie "**Exit**" zum Verlassen eines Service Sub-Menüs.

4. Vorübergehendes verlassen des Service-Mode

4.1 Auf der Fernbedienung Exit drücken.
Mit der Tasten Menü gelangen Sie zum Menü-Übersicht.
4.2 Durch Drücken der margentafarbenen Taste gelangen Sie in das Service Setup Sub-Menü.

5. Service-Mode verlassen

5.1 Zum Verlassen des Service-Mode das Gerät in Stand By schalten oder mit dem Netzschalter ausschalten.

SERVICE-MODE (I)

Il Service-Mode è necessario per l'allineamento dell'apparecchio. Tutte le regolazioni si effettuano con il telecomando. (tranne le regolazionu del fuoco e le tensioni della griglia schermo).

1. Attivazione del Service-Mode

1.1 Commutare il televisore in stand-by con il telecomando.
1.2 Spegnere l'apparecchio con l'interruttore di rete (attendere finchè il LED è spento)
1.3 Mentre tenete premuto il pulsante "**Magenta** (testo)" del RCU, accendete il televisore utilizzando l'interruttore di rete. Continuate a premere il pulsante "**Magenta** (testo)" del RCU fino all'apparizione del Service Setup Sub Menu

ID 00.07	*(1)*
INIT	*(2)*
STANDARD 00 0-03	*(3)*

2. Service Menu

2.1 Navigazione

- Premere i tasti ∧ / ∨ per selezionare la linea del menu
- Premere i tasti 〈/〉 per la regolazione o la selezionz di un elemento del menu

2.2 Linee Service Menu

Set-up lines (INIT,STANDARD,OSDCONTR) -
Geometry lines (HS,VS, VA, SC,VSH)
Video lines (CL, BLORS/BLORP,BLOGS/BLOGP,WPRS/WPRP,WPGS/WPGP, WPBS/WPBP, PWS/PWP, BKS, YD) - **IF lines** (TOP) -
Videoprocessor (CD0, CD1, SYN0, SYN1, DEF,VI0,VI1,SOUND,CONT0, CONT1,FEAT0).

2.3 Attivazione di una linea :

La prima linea (1) è continuamente visualizzata. La selezione delle linee sucessive (2) o (3) è possibile in service menu premendo i tasi ∧ / ∨.
la linea selezionata sarà visualizzata di colore giallo.

3. Taratura della funzione scelta e memorizzazione

3.1 Il valore momentaneo della funzione scelta viene indicato in formato esadecimale a destra, accanto alla posizione da allineare e può essere cambiato con il pulsante 〈/〉 del telecomando.
3.2 I valori verranno memorizzati nella memoria num quando verrà lasciato il menù service mode.
3.3 Premere il tasto "**Exit**" per uscire da qualsiasi Service Sub Menu.

4. Uscita temporanea dal Service Mode

4.1 Premere Exit sul telecomando.
Al menu di uso quotidiano si accede attraverso il pulsante Menu.
4.2 Il Service Setup Sub Menu è accessibile attraverso il tasto "**Magenta**".

5. Disattivazione del Service-Mode

5.1 Per disattivare il Service Mode, commutare l'apparecchio in stand-by o spegnerlo con l'interruttore di rete.

MODO SERVICIO (E)

Se necesita el MODO SERVICIO para ajustar el aparato. Todos los ajustes se hacen con el mando a distancia (a excepción de la tensión del sistema, los ajustes del foco y las tensiones de la rejilla de pantalla).

1. Ajustar el Modo Servicio

1.1 Con el mando a distancia conectar a STANDBY el televisor.
1.2 Desconectar el aparato con el interruptor de la red (esperar hasta que el LED se apague).
1.3 Mientras mantiene pulsado el botón "**Magenta** (texto)" de la UCR, pulse el interruptor general de red para encender el televisor.
Mantenga pulsado el botón "**Magenta** (texto)" hasta que aparezca el submenú de la configuración del servicio.

ID 00.07	*(1)*
INIT	*(2)*
STANDARD 00 0-03	*(3)*

2. Menú Servicio.

2.1 Desplazamiento
- Pulse el botón ∧ / ∨ para seleccionar la línea del menú.
- Pulse el botón 〈/〉 para ajustar o seleccionar una opción del menú.

2.2 Líneas del menú del Modo Servicio
Set-up lines (INIT,STANDARD,OSDCONTR) -
Geometry lines (HS,VS, VA, SC,VSH)
Video lines (CL, BLORS/BLORP,BLOGS/BLOGP,WPRS/WPRP,WPGS/WPGP, WPBS/WPBP, PWS/PWP, BKS, YD) - **IF lines** (TOP) -
Videoprocessor (CD0, CD1, SYN0, SYN1, DEF,VI0,VI1,SOUND,CONT0, CONT1,FEAT0).

2.3 Activación de una línea :
La primera línea (1) se muestra siempre en la pantalla. La selección secuencial de las líneas (2) y (3), es posible pulsando las teclas ∧ / ∨ .
La línea seleccionada es la que está en color amarillo

3. Ajuste de la función elegida y almacenamiento

3.1 El valor momentáneo de la función elegida es indicado de modo hexadecimal a la derecha, al lado de la posición a ajustar, y puede cambiarse con la tecla 〈 o bien 〉 en el mando a distancia.
3.2 Los valores serán memorizados en la EEPROM al salir del menú del Modo Servicio.
3.3 Pulse el botón "**Exit**" para salir de cualquier submenú Servicio.

4. Salida temporal del Modo Servicio

4.1 Pulse Salir en el mando a distancia.
Con el botón Menu puede acceder al menú de uso cotidiano.
4.2 Puede acceder al submenú de configuración del servicio mediante el botón "**Magenta**".

5. Salir del Modo Servicio

5.1 Conmute el aparato a STANDBY a fin de salir del MODO SERVICIO o desconectar con el interruptor de la red.

ALIGNMENT PROCEDURE - PROCESSUS DE REGLAGES - ABGLEICH - VISUALIZZAZIONE DEL VALORE DI REGOLAZIONE - PROCEDIMIENTO DE ALINEACION

SET-UP LINES

ID 02.11

INIT
STANDARD* 00 0-03
KEY ◀ OFF OFF-ON ▶
OSDCONTR 03 0-0F
WBF-R* 88 0-FF
SOC1-0 2F 0-3F
OIFP** 20 0-3F

ID 00.07

INIT
Initialise TV set.
Sets all Service Mode functions stored in the EEprom to their default values.
See below the default values table.

⚠ "INIT" copy all service parameters from the ROM to EEprom. It will be necessary in this case to readjust most of the service mode functions.

⚠ "INIT" copie toutes les valeurs par défaut stockées en ROM vers l'EEprom.Il peut être nécessaire dans ce cas de reprendre la plupart des réglages du mode service.

⚠ "INIT" kopiert alle Service-Parameter aus dem ROM in das EEPROM. Es ist anschliessend notwendig die meisten Service-Funktionen neu abzugleichen

⚠ "INIT" copia tutti i parametri di servizio dalla ROM alla EEprom. Sarà necessario in seguito regolare alcune funzioni in Service Mode.

⚠ "INIT" copia todos los valores por defecto memorizados en la ROM hacia la EEPROM. Puede ser necesario en el caso de tener que reajustar la mayor parte de los ajustes en Modo Servicio

STANDARD
RF Norm Group Selection

00	**EU**	BG / LL'
01	**FR**	LL' / BG
02	**UK**	PAL I only
03	**DK**	DKK' PAL, SECAM

ROM Default Value :
TX 807 C / CS Europe : 00 EU

KEY	Key lock ON,OFF... Default value : OFF
OSDCONTR **Full-page video text contrast**	factory Setting OSDCONTR = 03H
WBF-R* **Timing of "wide blanking"**	factory Setting WBF-R = 88H
SOC1-0 **Peak White Limiting**	Specific TDA9554PS (UOC-N2) factory Setting SOC1=2FH
OIF **Offset IF demodulator**	Specific TDA9554PS (UOC-N2) factory Setting OIF=20H

V-Slope

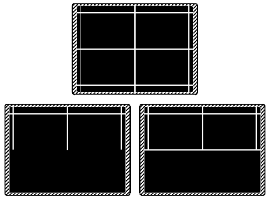

Correct incorrect

GEOMETRY LINES*

HS 20 0-3F
VS ◀ 1A 0-3F ▶
VA 20 0-3F
SC 10 0-3F
VSH 20 0-3F

HS

VS
V_Slope

- Apply a test pattern signal to the TV with a single horizontal and vertical line on the screen.
- Select the "**VS**" line of the menu. The bottom half of the screen will go black.
- Adjust VS until the centre line of the pattern is just invisible.
- Leave the line "**V_Slope**".
- Switch the test pattern signal to the crosshatch geometry pattern.
- Perform the geometry adjustments described below.

- Appliquer une mire de barres avec seulement une ligne blanche horizontale en milieu de l'écran.
- Sélectionner la ligne "**V-Slope**". La moitié basse de l'écran devient noire.
- Aligner "**V_Slope**" pour que la ligne médiane soit à peine non visible.
- Commuter la mire en mode de réglage de géométrie (quadrillage).
- Effectuer les reglages de geometrie ci- après.

- Speisen Sie ein Testbild mit einem horizontalen Strich in der Bildmitte ein.
- Wählen Sie im Menü die Funktion "V-Slope" an. Die untere Bildhälfte wird dunkel.
- Stellen Sie "V-Slope" so ein, daß die Mittellinie fast verschwindet.
- Verlassen Sie die Funktion "V-Slope".
- Speisen Sie ein Gittertestbild ein.
- Nehmen Sie die Geometrieeinstellungen wie nebenstehend beschrieben vor.

- Applicare un monoscopio con un'unica linea bianca orizzontale al centro dello schermo
- Selezionare la riga "**V slope**" del menu. La parte bassa dello schermo viene oscurata.
- Allineare la "Vertical Slope" in modo che la linea centrale sia appena visibile
- Abbandonare la riga "**V slope**".
- Posizionare il monoscopio
- Effettuare le regolazioni di geometria descritte in precedenza
- Memorizzare.

- Aplique una carta de ajuste con sólo una línea blanca horizontal y una vertical en el centro de la pantalla.
- Seleccionar en el menú, la línea "**V-Slope**". La mitad inferior de la pantalla se pondrá oscura.
- Ajuste "**V-Slope**" justo hasta que la línea horizontal sea invisible.
- Cambiar la carta de ajuste a "cuadrícula" y efectuar los ajustes de geometría descritos a continuación.
- Antes de salir, memorizar con "Store"

VA

SC
S-Correction

S

VSH

* According to software version.
** " S " : Video signal received is SECAM.
" P " : Video signal received is PAL.

VIDEO LINES

CL ◀ 00 0-0F ▶
BLORS* 08 0-0F
BLOGS* 08 0-0F
WPRS* 20 0-3F
WPGS* 20 0-3F
WPBS* 20 0-3F
PWS* 20 20 20 0-3F
BKS* ON OFF-ON
YD 08 0-0F

CL **Cathode Level**	Factory setting. Extension of the peak White range. Réglage usine. Extension des valeurs de réglages du Peak White. Fabrik-Einstellung (Umfang des Spitzenweiß Ein-bereiches) Factory Setting. Extension of the peak White range. Ajuste de fábrica Extensión del margen del Peak White.
Cut-off ** **BLORS / BLORP** **Black Level Offset Red SECAM/PAL** **BLOGS / BLOGP** **Black Level Offset Green SECAM/PAL**	☼ + ◕ + ◑ = 50% Grey scale test pattern white =100% grey
Drive** **WPRS / WPRP** **White Point Red SECAM/PAL** **WPGS / WPGP** **White Point Green SECAM/PAL** **WPBS / WPBP** **White Point Blue SECAM/PAL**	☼ + ◕ + ◑ = 50% Grey scale test pattern white =100% white
PWS / PWP** **Peak White SECAM/PAL**	☼ + ◕ + ◑ = 50% colourimeter
BKS **Black Stretch**	Factory Setting
YD **Luminance Delay**	Use ◁▷ to adapt the image

Sets	Nits	Sets	Nits
10"	500	21"OT	420
14"	450	21"MP 90°	450
17"	450	25"MP 110°	400
20"FB	450	28"MP 110°	300

*Perform the G2 and the Focus settings beforehand.
Effectuez au préalable les réglages de G2 et de focus.
Stellen Sie zuvor G2 und "Focus" ein.
Effetuare le regolazioni G2 e del Fuoco innanzitutto.
Efectuar previamente los ajustes de G2 y Foco*

** Adjust separate for PAL / SECAM
" S " : Video signal received is SECAM.
" P " : Video signal received is PAL.

IF LINES

TOP ◀ 20 0-0F ▶
FFI 00 0-01
ACL* 00 0-01

TOP
AGC - Take Over

- Minimum noise- Minimum de bruit
- Minimum Rauschen - Rumore minimo
- Minimo ruido

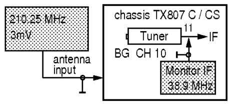

- Set TOP to 00
- Adjust TOP for maximum gain of IF signal.
- Reduce IF level about 8dB.

ROM Defaut Value : AGC : 20

FFI* **Fast Filter IF-PLL**	Fast Filter (IF / PLL) Filtre rapide (FI / PLL) Schnelles Filter (ZF / PLL) Filtro /rapido (IF / PLL) 00 : Europ Factory Setting.
ACL* **Automatic Colour limiting**	Factory Setting. ACL=00

VIDEO PROCESSOR LINES

CD0 84 0-FF
CD1 00 0-0F
SYN0 ◀ 30 0-FF ▶
SYN1 08 0-FF
DEF 00 0-0F
VI0 00 0-0F
VI1 00 0-0F
SOUND 00 0-FF
CONT0 46 0-FF
CONT1 00 0-0F
SOUND1 00 0-FF
FEAT0 00 0-01
FEAT1 00 0-01
LOCK 00 0-01
LIMIT 00 0-01

CD0 **CD1**	- Colour Decoder 0 = 84 - Colour Decoder 1 **mono sets: CD1 = 80H** **stereo sets: CD1 = 00H** Factory Setting.
SYN0 **SYN1**	- Syncronisation 0 = 30 - Syncronisation 1 = 1C Factory Setting.
DEF	- Deflection = 00 Factory Setting.
VI0 **VI1**	- Vision IF 0 = 40 - Vision IF 1 = 00 Factory Setting.
SOUND	- Sound = 00 Factory Setting.
CONT0 **CONT0**	- Control 0 = 40 - Control 1 = 00 Factory Setting.
FEAT0	- Features 0 = 00 Factory Setting.

* According to software version.

DEFAULT VALUES

OSD	DESCRIPTION	DEFAULT VALUE (HEX)
ID	Software	
INIT	Initialise TV set	
STANDARD	RF Norm Group Selection	0 (EU)
KEY	Key Lock	OFF
OSDCONTR	OSD Contrast	03
WBF-R	Timing of wide blanking	88
SOC1-0	Peak White Limiting	08
OIFS	Offset IF demodulator	20
FR	France	00
HS	Horizontal Shift	20
VS	Vertical Slope	1A
VA	Vertical Amplitude	20
SC	S-Correction	10
VSH	Vertical Shift	20
CL	Cathode Level	00
BLORS	Black Level Offset Red SECAM	8
BLORP	Black Level Offset Red PAL	8
BLOGS	Black Level Offset Green SECAM	8
BLOGP	Black Level Offset Green SECAM	8
WPRS	White Point Red SECAM	20
WPRP	White Point Red PAL	20
WPGS	White Point Green SECAM	20
WPGP	White Point Green PAL	20
WPBS	White Point Blue SECAM	20
WPBP	White Point Blue PAL	20
PWS	Peak White SECAM	20
PWP	Peak White PAL	20
BKS	Black Stretch	01
YD	Luminance Delay	08
TOP	AGC Take-Over	20
FFI	Fast Filter IF-PLL	00
ACL	Automatic Colour limiting	00
CD0	Colour Decoder 0	84
CD1	Colour Decoder 1	Mono : 80 Stereo: 00
SYN0	Synchronisation 0	30
SYN1	Synchronisation 1	1C
DEF	Deflection	00
VI0	Vision IF 0	40
VI1	Vision IF 1	00
SOUND	Sound	00
CONT0	Control 0	40
CONT1	Control 1	00
FEAT0	Features 0	00

GEOMETRY MODE ALIGNMENT

90° tube

Signal : 50 Hz - 4/3 test pattern

4 / 3 **standard mode**	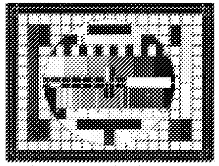	**Overscan V=107% , H=107%** 1 - Adjust Horizontal Centering (HS) 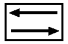 2 - Adjust Vertical centering (VSH) and Vertical amplitude 107% (VA) 3 - Adjust Vertical Slope (VS) and linearity (SC) 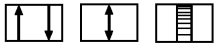 4-If necessary repeat VSH, VA alignment to 7% overscan.

110° tube

Signal : 50 Hz - 4/3 test pattern

4 / 3 **standard mode**	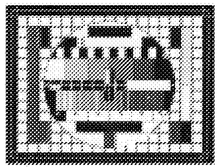	**Overscan V=107% , H=107%** **EAST-WEST MODULE** 1 - **PL140** : Turn fully counterclockwise. **MAIN BOARD** 2 - Adjust Horizontal Centering (HS) 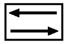 3 - Adjust Vertical centering (VSH) and Vertical amplitude 107% (VA) 4 - Adjust Vertical Slope (VS) and linearity (SC) 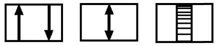 5 - If necessary repeat VSH, VA alignment to 7% overscan. **EAST-WEST MODULE** 6 - **PL140** : Adjust Horizontal amplitude with PL140 for optimum oversc 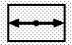 7 - **PL141** :Adjust Pincushion. 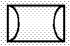 8 - **PL143** : Adjust Trapezium 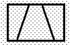 9 -If necessary repeat Horizontal amplitude, pincushion correction and trapezium alignment

LIST OF ABBREVIATIONS - LISTE DES ABREVIATIONS - ABKÜRZUNGEN
LISTA DELLE ABBREVIAZIONI - LISTA DE ABREVIACIONES

● **BCL**	BEAM CURRENT LIMITING INFORMATION
● **BLACK_I**	BLACK CURRENT INPUT
● **B / B'**	BLUE SIGNAL TO VIDEO AMPLIFIER
● **CVBS**	COMPOSITE VIDEO BASE BAND SIGNAL
● **DEGAUSS**	DEGAUSS SIGNAL
● **DEG-COIL**	DEGAUSS COIL
● **FAULT**	SIGNAL TO DETECT FAULT CONDITION
● **FB**	FAST BLANKING
● **G / G'**	GREEN SIGNAL TO VIDEO AMPLIFIER
● **H / HDRIVE**	DRIVE SIGNAL FOR HORIZONTAL DEFLECTION
● **HTR / HEATER**	HEATER VOLTAGE
● **I_CUT**	CUT OFF CURRENT
● **IR**	DATA FROM INFRARED RECEIVER
● **MUTE**	MUTE AUDIO AMPLIFIER
● **OPTO**	REGULATION SIGNAL GOING TO OPTO COUPLER ON DC-DC POWER SUPPLY MODULE.
● **PO**	POWER ON. SIGNAL FROM MICRO. TO POWER SUPPLY. SWITCHES THE POWER SUPPLY FROM STANDBY TO ON.
● **R / R'**	RED SIGNAL TO VIDEO AMPLIFIER
● **SCL**	SERIAL CLOCK
● **SDA**	SERIAL DATA
● **SLOW_SW**	SLOW SWITCH FROM SCART
● **SOUND_SW**	IF SELECTION CONTROL INPUT
● **UA**	POSITIVE AUDIO VOLTAGE
● **-UA**	AUDIO VOLTAGE GROUND
● **USTBY**	STANDBY VOLTAGE: 11.9V
● **+UB / USYS**	SYSTEM VOLTAGE
● **USYS_MOD**	SIGNAL TO MODULATE USYS
● **UVIDEO**	VIDEO VOLTAGE FOR THE CRT BOARD
● **V _DRIVE**	DRIVE SIGNAL FOR VERTICAL DEFLECTION
● **+VSUPPLY**	12.9V. POSITIVE SUPPLY VOLTAGE FOR VERTICAL POWER AMPLIFIER
● **-VSUPPLY**	10.5 TO 12.5V (DEPENDING ON TUBE TYPE). NEGATIVE SUPPLY VOLTAGE FOR VERTICAL POWER AMPLIFIER 12.9V.
● **VT**	TUNING VOLTAGE
● **+5VON**	SUPPLY VOLTAGE FOR THE MICROPROCESSOR AND AUDIO PART. ONLY PRESENT IN ON MODE.
● **+8V**	SUPPLY VOLTAGE FOR THE MICROPROCESSOR, AUDIO PART AND FOR THE DRIVER PULL-UP RESISTOR
● **+3VUP**	PRESENT IN STANDBY MODE. POWER SUPPLY VOLTAGE FOR THE MICROPROCESSOR. POWER SUPPLY INTERNAL USED AS REFERENCE VOLTAGE FOR THE REGULATION
● **+33V**	TUNER VOLTAGE

INTEGRATED CIRCUITS AND TRANSISTORS OUTLINE - CIRCUITS INTEGRES ET TRANSISTORS
INTEGRIERTE SCHALTUNGEN UND TRANSISTOREN - CIRCUITI INTEGRATI TRANSISTOR
CIRCUITOS INTEGRADOS Y TRANSISTORES

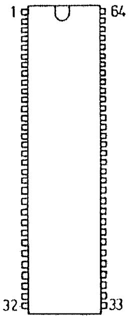

TDA9351N2
TDA9367N1

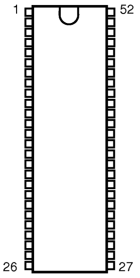

MSP3415D-P0

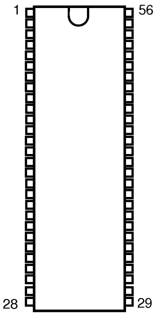

TDA8842

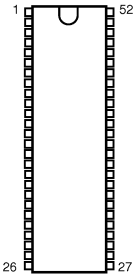

SAA5281ZP/E

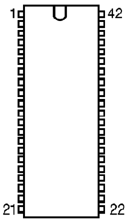

TMP47P1637VN

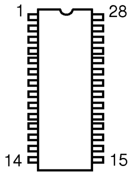

STV5348D

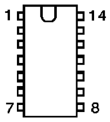

STV8225

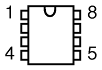

ST24W04
M22W04

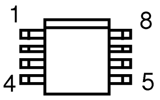

TDA 7267

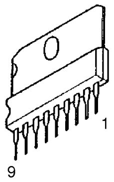

STV8130

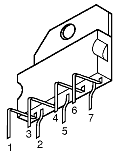

TDA9302H
TDA 9320H

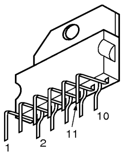

TDA7253
TDA7263

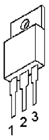

MC7805/ACT
78L09

BC 337
BC337-40
BC 547B/C
BC 548B
BC 558B

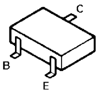

BC846B
BC 847B
BC856B
BC 858 B/C
BC857
BCR141
BCR185
DTC144EK
MMBTH10L
RN1409
RN2417

TT52
BF 422
BF423
2SA1020
2SC2236

E B C

BC327

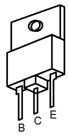

BUH515D
STP3NB90FP

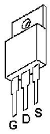

STP3 NA80F1

EACEM-IRIS REPAIR CODING SYSTEM

NDITION
DE

MAIN SYMPTOM CODE

EXTENDED SYMPTOM CODE (*1)

CONSTANTLY
INTERMITTENTLY
AFTER A WHILE
IN A HOT ENVIRONMENT
IN A COLD ENVIRONMENT
WHEN SWITCHING
UNDER VIBRATION
IN A DAMP/WET/ RAINY/SNOWY ENVIRONMENT
IN A DRY ENVIRONMENT
AFTER BEING DROPPED/ TRANSPORT DAMAGE
AFTER LIGHTNING STRIKE
ONLY CERTAIN STATIONS/ SOFTWARE/ MODE/ CHANNELS/ FREQUENCY BAND
ONLY ON CERTAIN STANDARDS
ONLY ON ONE CHANNEL
ONLY WITH CERTAIN INPUT(S)
ONLY ON CERTAIN OUTPUT(S)
IN STANDBY/OFF MODE
AT EDIT POINT
WHEN INTERCON-NECTED
LIQUID CONTAMINATION
FOR A SHORT WHILE AFTER SWITCH-ON
AFTER MAKING A COPY
UNDER STRESSED CONDITIONS / HIGH LOAD
AT SWITCH-OFF

		1 NO ACTION	2 LEVEL	3 QUALITY	4 NOISE
1	GENERAL	**110 POWER PROBLEM OR NOT OPERATING** 111 NO POWER 112 NO POWER WHEN USING AC-ADAPTER 113 NO POWER WHEN USING DRY BATTERIES 114 NO POWER WHEN USING RECHARGEABLE BATTERIES 115 NO POWER FROM SOLAR CELL 116 NO POWER WHEN USING A CAR BATTERY 117 SHORT OPERATION TIME/SHORT BATTERY LIFE 118 POWER-OFF FUNCTION NOT WORKING 119 NO SWITCH-ON FROM STANDBY 11A POWERS UP, BUT NO OPERATION 11B CYCLIC POWER ON/OFF 11C BLOWING EXTERNAL (MAINS) FUSE 11D SET SWITCHES OFF BY ITSELF 11E BACKUP BATTERY PROBLEM 11F NOT OPERATING 11G NO AUTOMATIC SWITCH ON/OFF 11H PROTECTION SWITCH/FUSE IN SET TRIGGERS 11J RECHARGEABLE BATTERY NOT RECOGNIZED 11X OTHER ‘POWER’ PROBLEM	**120 CHARGING PROBLEM** 121 NO BATTERY CHARGING 122 INCOMPLETE BATTERY CHARGE 123 CHARGING TIME TOO LONG 12X OTHER ‘CHARGING’ PROBLEM	**130 DISPLAY FUNCTION PROBLEM** 131 FAULTY DISPLAY 132 FAULTY LAMP/LED OPERATION 133 FAULTY LEVEL METER OPERATION 134 FAULTY ON-SCREEN DISPLAY OPERATION 135 ELECTRONIC TUNING DISPLAY FAULT 136 MECHANICAL TUNING DISPLAY FAULT 137 FAULTY TIME CODE DISPLAY 138 FAULTY ALARM/ERROR DISPLAY 139 DISPLAY DIM/TOO DARK 13A UNUSUAL OR INCORRECT MESSAGE IN DISPLAY 13B NO BACKLIGHT 13C BEEPS, NO DISPLAY 13D WARNING LIGHT DOES NOT WORK 13E WARNING LIGHT LIGHTS UP 13X OTHER ‘DISPLAY FUNCTION’ PROBLEM	**140 ABNORMAL NOISE** 141 CRT DISCHARGING NOISE 142 EHT DISCHARGING NOISE 143 NOISY CABINET/CRACKING TRAYS 144 NOISY TRANSFORMER/HUMMING 145 NOISY COMPONENT(S) 146 RATTLE 147 CLICKING 148 CLOCK NOISE 149 CRACKING 14A WHISTLING 14X OTHER ‘ABNORMAL’ NOISE
2	COMMUNICATION	**210 NO RECEPTION OR CONNECTION** 211 NO AM RECEPTION 212 NO FM RECEPTION 213 NO SW RECEPTION 214 NO VHF RECEPTION 215 NO UHF RECEPTION 216 NO BS RECEPTION 217 NO CS RECEPTION 218 NO HDTV RECEPTION 219 NO GPS/QPS RECEPTION 21A NO RECEPTION OF DIGITAL BROADCASTING 21B NO IR RECEPTION 21C NO DIAL TONE 21D NO MODEM/FAX CONNECTION 21E MODEM NOT ANSWERING/NO CARRIER 21F NO NETWORK CONNECTION/NETWORK INITIALIZATION FAILS 21X OTHER ‘NO RECEPTION’ PROBLEM	**220 POOR RECEPTION OR CONNECTION** 221 POOR AM RECEPTION 222 POOR FM RECEPTION 223 POOR SW RECEPTION 224 POOR VHF RECEPTION 225 POOR UHF RECEPTION 226 POOR BS RECEPTION 227 POOR CS RECEPTION 228 POOR HDTV RECEPTION 229 POOR GPS/QPS RECEPTION 22A POOR RECEPTION OF DIGITAL BROADCASTING 22B POOR IR RECEPTION 22X OTHER ‘POOR RECEPTION’ PROBLEM	**230 TRANSMISSION/CONNECTION PROBLEM** 231 NO TRANSMISSION/CONNECTION 232 POOR TRANSMISSION/CONNECTION 233 TRANSMISSION LEVEL TOO HIGH 234 NO TRANSMISSION BETWEEN BASE UNIT AND HANDSET 235 POOR TRANSMISSION BETWEEN BASE UNIT AND HANDSET 236 NO IR TRANSMISSION 237 ONE-SIDED CONNECTION 238 MODEM HANGS UP IMMEDIATELY ONCE CONNECTED 239 MODEM DROPS LINE DURING CONNECTION 23X OTHER ‘TRANSMISSION/CONNECTION’ PROBLEM	**240 NOISY RECEPTION/TRANSMISSION** 241 LINE NOISE 242 OSCILLATION 243 INTERSTATION INTERFERENCE 24X OTHER ‘NOISY RECEPTION/TRANSMISSION’ PROBLEM
3	PICTURE	**310 NO PICTURE** 311 NO PICTURE IN E TO E MODE 312 NO PICTURE IN PLAYBACK MODE 313 NO PICTURE IN VIEWFINDER 314 NO PICTURE, ONLY RASTER 315 NO RASTER, BLACK PICTURE 316 ONLY HORIZONTAL LINE 317 ONLY VERTICAL LINE 318 NO PICTURE IN LCD 319 NO 2nd (OR HIGHGER) MONITOR DISPLAY 31X OTHER ‘NO PICTURE’ PROBLEM	**320 PICTURE LEVEL PROBLEM** 321 PICTURE TOO DARK 322 PICTURE TOO BRIGHT 323 CONTRAST TOO LOW 324 CONTRAST TOO HIGH 325 SATURATED WHITE OR BLACK LEVEL 326 SHADING ON PICTURE 327 ONLY PARTIAL PICTURE 32X OTHER ‘PICTURE LEVEL’ PROBLEM	**330 PICTURE QUALITY PROBLEM** 331 POOR PICTURE RESOLUTION 332 POOR FOCUS 333 RINGING ON PICTURE 334 EXCESSIVE SMEAR/LAG 335 POOR LINEARITY OR GEOMETRY 336 PICTURE SIZE INCORRECT 337 INCORRECT CENTRING OF PICTURE 338 PICTURE SLANTED 339 V-SIZE INCORRECT 33A H-SIZE INCORRECT 33X OTHER ‘PICTURE QUALITY’ PROBLEM	**340 PICTURE NOISE** 341 SNOWY PICTURE 342 DOT NOISE OR DROPOUT ON PICTURE 343 NOISE BARS ON PICTURE 344 BLANKING LINES ON PICTURE 345 BEATING ON PICTURE 346 GHOSTING ON PICTURE 347 VCR HEAD SWITCHING NOISE ON PICTURE 348 OVERMODULATION NOISE 349 MOIRÉ 34A MOSAIC NOISE 34B SCRAMBLED PICTURE 34X OTHER ‘PICTURE NOISE’ PROBLEM
4	COLOUR	**410 NO COLOUR** 411 NO COLOUR IN E TO E MODE 412 NO COLOUR IN PLAYBACK MODE 413 NO COLOUR IN VIEWFINDER 414 NO COLOUR IN PART OF PICTURE 41X OTHER ‘NO COLOUR’ PROBLEM	**420 COLOUR LEVEL PROBLEM** 421 WEAK COLOUR 422 EXCESSIVE COLOUR 42X OTHER ‘COLOUR LEVEL’ PROBLEM	**430 POOR COLOUR QUALITY** 431 SOME OR ALL COLOURS MISSING 432 POOR WHITE BALANCE 433 HUE PROBLEM 434 PURITY ERROR 435 LANDING ERROR/WHITE UNIFORMITY 436 CONVERGENCE ERROR 437 REGISTRATION ERROR 438 PITCH MOIRÉ/RAINBOW PATTERN 439 COLOUR SHIFT 43X OTHER ‘COLOUR QUALITY’ PROBLEM	**440 NOISY COLOUR** 441 COLOUR NOISE ON A BLACK & WHITE PICTURE 442 COLOUR STREAKING 443 COLOUR BARS ON PICTURE 44X OTHER ‘COLOUR NOISE’ PROBLEM
5	AUDIO	**510 NO AUDIO** 511 NO SOUND IN E TO E MODE 512 NO PLAYBACK OF OUTGOING MESSAGE(S) 513 NO PLAYBACK OF INCOMING MESSAGE(S) 514 NO AUDIO PLAYBACK 515 NO SOUND FROM HANDSET 516 NO SOUND FROM SPEAKER 517 NO SOUND FROM EARPHONE/HEADPHONE 518 NO MICROPHONE SOUND 519 NO SOUND FROM DIGITAL OUTPUT 51X OTHER ‘NO AUDIO’ PROBLEM	**520 AUDIO LEVEL PROBLEM** 521 LOW AUDIO LEVEL 522 EXCESSIVE AUDIO LEVEL 523 BALANCE PROBLEM 524 FADER PROBLEM 525 AUDIO LEVEL REMAINING/NO MUTING 52X OTHER ‘AUDIO LEVEL’ PROBLEM	**530 AUDIO QUALITY** 531 POOR FREQUENCY RESPONSE 532 DISTORTED AUDIO 533 NO OR POOR TREBLE 534 NO OR POOR BASS 535 EARPHONE/HEADPHONE AUDIO POOR 53X OTHER ‘AUDIO QUALITY’ PROBLEM	**540 NOISY AUDIO** 541 HUM 542 HISS 543 CROSSTALK 544 STATIC, POP OR CLICK NOISE 545 BUZZ 546 SCRATCHING NOISE 547 IGNITION NOISE 548 WHISTLING/MULTIPATH NOISE 549 DATA/DIGITAL NOISE 54X OTHER ‘AUDIO NOISE’ PROBLEM
6	MECHANISM	**610 NO MECHANICAL OPERATION** 611 NO ROTATION OF MOTOR/DISC 612 NO FORWARD OPERATION 613 NO REVERSE OPERATION 614 NO FAST FORWARD OR REWIND FUNCTION 615 NO LOADING 616 NO UNLOADING OR EJECTING 617 NO AUTO SHUT-OFF OPERATION 618 TONEARM DOES NOT MOVE 619 DISC NOT BEING EJECTED 61A MAGAZINE OR MODULE LOADING/UNLOADING 61B CONTROL/SWITCH NOT WORKING 61X OTHER ‘NO MECHANICAL OPERATION’ PROBLEM	**620 IRREGULAR MECHANICAL OPERATION** 621 IRREGULAR ROTATION 622 IRREGULAR FORWARD MODE 623 IRREGULAR REVERSE OPERATION 624 IRREGULAR FAST FORWARD OR REWIND FUNCTION 625 IRREGULAR LOADING OF MEDIA 626 IRREGULAR UNLOADING OR EJECTING 627 IRREGULAR AUTO SHUT-OFF OPERATION 628 IRREGULAR TONEARM MOVEMENT 629 IRREGULAR EJECTION OF DISC 62A IRREGULAR DIRECTION CHANGE 62B FAULTY DISC CHANGE OPERATION 62X OTHER ‘IRREGULAR MECHANICAL OPERATION’ PROBLEM	**630 SPEED PROBLEM** 631 SPEED TOO FAST 632 SPEED TOO SLOW 633 SPEED UNADJUSTABLE 63X OTHER ‘SPEED’ PROBLEM	**640 MECHANICAL NOISE** 641 ROTATION NOISE/DRUM NOISE 642 MOTOR NOISE 643 WIND/AIR NOISE 644 SQUEALING 645 FAN NOISE 646 DISC SCRAPING 647 NOISY TAPE LOADING 648 GEAR NOISE 649 CONTROL OR SWITCH NOISY 64A GRINDING 64B RUMBLING 64C VIBRATION NOISE 64X OTHER ‘MECHANICAL NOISE’ PROBLEM
7	DATA PROCESSING	**710 NO DATA PROCESSING OPERATION** 711 NO INITIAL SCREEN 712 SYSTEM DOES NOT RESET 713 SYSTEM DOES NOT BOOT UP 714 NO OPERATION FROM PLUG-IN MODULE/PERIPHERAL 715 NO KEYBOARD OPERATION 716 NO OPERATION FROM OTHER INPUT/OUTPUT DEVICE 717 NO DATA STORAGE OPERATION 718 NO DATA COMMUNICATION 719 ERROR MESSAGE DISPLAY 71A HDD BOOT FAILURE 71B FDD BOOT FAILURE 71X OTHER ‘NO DATA PROCESSING’ PROBLEM	**720 FAULTY DATA PROCESSING OPERATION** 721 INCORRECT DATA 722 SYSTEM RESET WHILE BEING USED 723 SYSTEM LOCKS OUT/CRASHES/HANGS 724 FAULTY OPERATION OF PLUG-IN MODULE 725 FAULTY KEYBOARD OPERATION 726 FAULTY OPERATION OF OTHER INPUT/OUTPUT DEVICE 727 FAULTY DATA STORAGE OPERATION 728 FAULTY DATA COMMUNICATION 729 MEMORY ERROR 72A REQUIRES ‘SET UP’ AT BOOTING 72X OTHER ‘FAULTY DATA PROCESSING’ PROBLEM	**730 DATA DISPLAY PROBLEM** 731 INCORRECT CHARACTER DISPLAY 732 MISSING DISPLAY CHARACTERS 733 FAULTY GRAPHIC DISPLAY 734 FAULTY SWITCHING BETWEEN GRAPHIC/ CHARACTER MODE 735 FAULTY PROMPT/CURSOR OPERATION 736 DATA DISPLAY COLOUR INCORRECT 737 NO PAGING OR SCROLL MODE 73X OTHER ‘DATA DISPLAY’ PROBLEM	**740 KEYBOARD/POINTING DEVICE** 741 MOUSE/TRACKBALL/TRACKPAD NOT WORKING 742 KEYBOARD LOCKS UP 743 POINTING DEVICE LOCKS UP 744 STICKY KEY(S) 745 INOPERATIVE KEY(S) 746 POINTING DEVICE NOT TRACKING PROPERLY 747 POINTING DEVICE JITTERY 748 LEFT- OR RIGHT CLICK BUTTON INOPERATIONAL 749 TRACKPAD SURFACE DAMAGED 74A KEYBOARD KEY(S) DAMAGED 74X OTHER KEYBOARD/POINTING DEVICE PROBLEM
8	PRINT/COPY/SCAN	**810 NO PRINT/COPY/SCAN OPERATION** 811 NOT PRINTING 812 NO COMMUNICATION WITH PRINTER 813 PAPER NOT LOADING 814 NO PAPER FEED 815 NO IMAGE FIXATION 816 NO DOCUMENT FEEDING 817 SCANNER NOT WORKING 81X OTHER ‘NO PRINT/COPY/SCAN OPERATION’ PROBLEM	**820 ERRONEOUS PRINT/COPY/SCAN OPERATION** 821 PRINT IMAGE REVERSED (NEGATIVE/POSITIVE) 822 IRREGULAR PAPER FEED 823 ERRONEOUS PRINT MODE SWITCHING 824 COPY TOO DARK 825 COPY TOO BRIGHT 826 BLACK COPY 827 WHITE COPY 828 POOR COLOUR LEVELS 829 IRREGULAR DOCUMENT FEED 82A FAULTY CORRECTION FUNCTION 82B POOR SCANNING QUALITY 82X OTHER ‘PRINT/COPY/SCAN OPERATION’ PROBLEM	**830 POOR PRINT QUALITY** 831 INCORRECT PRINTING POSITION 832 LOW PRINT CONTRAST 833 EXCESSIVE PRINT CONTRAST 834 BLURRED PRINT IMAGE 835 PRINT IMAGE NOT SHARP 836 DOTS MISSING IN PRINT IMAGE 837 COLOUR STREAKING 838 NO COLOUR IN PART OF PICTURE 839 PRINT IMAGE/COPY INCOMPLETE 83A FAULTY CALIBRATION 83X OTHER ‘PRINT QUALITY’ PROBLEM	**840 NOISY PRINTING** 841 PRINTING NOISE LINES 842 DIRTY PRINTING 843 UNPLEASANT SMELL (OZONE) 844 BLACK LINES/STRIPES IN FEED DIRECTION 845 WHITE LINES/STRIPES IN FEED DIRECTION 846 BLACK LINES/STRIPES ACROSS FEED DIRECTION 847 WHITE LINES/STRIPES ACROSS FEED DIRECTION 84X OTHER ‘NOISY PRINTING’ PROBLEM

(*1)

AUTION

HE ‘X’ EXTENDED
YMPTOM CODES
*-**X) SHOULD
NLY BE USED TO
NDICATE THAT A
UITABLE
YMPTOM
ESCRIPTION IS
OT AVAILABLE
N THE
ONCERNED
YMPTOM GROUP

SYMPTOM CODE TABLE

5 UNSTABLE

150 REMOTE CONTROL PROBLEM

151 NO REMOTE CONTROL OPERATION
152 INCORRECT REMOTE CONTROL OPERATION
153 REMOTE CONTROL PROGRAMMING/ LEARNING MODE PROBLEM
154 POOR REMOTE CONTROL SENSITIVITY
15X OTHER 'REMOTE CONTROL' PROBLEM

250 UNSTABLE RECEPTION/TRANSMISSION

251 TUNING DRIFT
252 FADING
253 INTERMITTENT LINE/LINE BREAKING OFF
254 NO OR UNSTABLE CONNECTION COMBINED WITH 'WEAK SIGNAL STRENGTH' INDICATION
25X OTHER 'UNSTABLE RECEPTION/ TRANSMISSION' PROBLEM

350 UNSTABLE PICTURE

351 SYNC PROBLEM
352 PICTURE PUMPING
353 PICTURE JITTER
354 PICTURE SHAKING (HORIZONTAL OR VERTICAL)
355 FLICKERING PICTURE
356 FLASHING PICTURE
357 CYCLIC PICTURE MUTING
358 HEAD IMPACT ERROR CAUSING UNSTABLE PICTURE
359 VCR SKEW/H-SHIFT ERROR
35A FROZEN PICTURE
35B JUMPING/REPEATING PICTURE
35X OTHER 'UNSTABLE PICTURE' PROBLEM

450 UNSTABLE COLOUR

451 COLOUR FLASHING
452 HUE CONSTANTLY CHANGING
453 FLICKERING COLOUR
454 COLOUR NOT LOCKED
45X OTHER 'UNSTABLE COLOUR' PROBLEM

550 UNSTABLE AUDIO

551 JUMPING OR REPEATING AUDIO
552 AUDIO PUMPING OR BREATHING
553 AUDIO DROPOUTS
554 CYCLIC AUDIO MUTING
555 WOW AND FLUTTER
556 HOWLING/ACOUSTIC FEEDBACK
557 ECHO IN SOUND
55X OTHER 'UNSTABLE AUDIO' PROBLEM

650 MECHANICAL INSTABILITY

651 UNEVEN FEET
652 FAULTY HINGE
653 VIBRATING/JUMPING
654 PARTS LOOSE
655 DAMAGED WHEEL(S)
65X OTHER 'MECHANICAL INSTABILITY' PROBLEM

750 PERIPHERAL PROBLEM (NON-STORAGE)

751 PERIPHERAL DOES NOT INITIALISE
752 COMMUNICATION FAILURE WITH PERIPHERAL
753 INTERNAL PERIPHERALS FAILURE
754 EXTERNAL PERIPHERALS FAILURE
755 NETWORK CARD ERROR
756 PERIPHERAL FAILS SELF TEST
75X OTHER PERIPHERAL PROBLEM

850 UNSTABLE PRINTER OPERATION

851 UNSTABLE PAPER LOADING
852 UNSTABLE MULTI-PAPER LOADING
853 INCORRECT LINE-UP OF CHARACTERS
85X OTHER 'UNSTABLE PRINTER OPERATION' PROBLEM

6 RECORDING & PHYSICAL PROBLEMS

160 PHYSICAL DAMAGE

161 DAMAGED/DEFORMED CABINET/PANEL
162 DAMAGED HANDLE/CLIP
163 DAMAGED CONTROL KNOB(S)/BUTTON(S)/KEYPAD
164 DAMAGED DOOR/COVER
165 DAMAGED SEAL
166 DAMAGED PLUG/SOCKET/TERMINAL/CONNECTOR
167 DAMAGED LENS
168 DAMAGED CARTRIDGE OR STYLUS
169 DAMAGED ANTENNA
16A DAMAGED CRT OR VIEWFINDER/LCD DISPLAY
16B MISSING COMPONENT(S) OR ORNAMENTAL PARTS
16C PRINTED MARKINGS ERASED/PEELED OFF
16D SET BURNING/EMITS SMOKE
16E EXTERNAL SURFACE DAMAGE (BUBBLING/PEELING/RUSTING/SCRATCHED)
16F SMELL
16G WEAK/DAMAGED STAND
16H DAMAGED SPEAKER
16J SET GETS VERY HOT / PARTS MELTING
16K FOREIGN SUBSTANCE ON/IN UNIT
16L BURNING MARKS
16M INTERNAL SURFACE DAMAGE (BUBBLING/PEELING/RUSTING/SCRATCHED)
16N DAMAGED POWER CABLE
16P DAMAGED ACCESSORY
16R DISCOLOURATION
16X OTHER PHYSICAL DAMAGE

260 TUNING PROBLEM

261 MANUAL TUNING PROBLEM
262 AUTOMATIC TUNING PROBLEM
263 INCORRECT TUNING
264 TUNING MEMORY PROBLEM
26X OTHER 'TUNING' PROBLEM

360 POOR PICTURE RECORDING

361 NO PICTURE RECORDING
362 NO ERASURE PROTECTION FOR VIDEO
363 PREVIOUS VIDEO RECORDING NOT BEING ERASED
364 UNWANTED ERASURE OF PICTURE
365 NO CAMERA RECORDING
366 ONLY ONE FIELD PER FRAME BEING RECORDED
367 RECORDS ONLY A FEW PICTURES
36X OTHER 'PICTURE RECORDING' PROBLEM

460 POOR COLOUR RECORDING

461 NO COLOUR RECORDING
462 NOISY COLOUR RECORDING
46X OTHER 'COLOUR RECORDING' PROBLEM

560 POOR AUDIO RECORDING

561 AUDIO NOT BEING RECORDED
562 NO ERASURE PROTECTION FOR AUDIO
563 PREVIOUS AUDIO RECORDING NOT BEING ERASED
564 UNWANTED ERASURE OF AUDIO
565 MESSAGE NOT BEING RECORDED
566 DISTORTED AUDIO RECORDING
56X OTHER 'AUDIO RECORDING' PROBLEM

660 DAMAGE TO MEDIA

661 TAPE GETS SCRATCHED
662 DISC GETS SCRATCHED
663 TAPE GETS CHEWED/WRINKLED
664 TAPE JAMMED OR BROKEN
665 TAPE GETS CURLED
666 SLACK TAPE
667 TAPE STICKING
66X OTHER 'SOFTWARE DAMAGE' PROBLEM

760 DATA STORAGE PROBLEM

761 FORMATTING PROBLEM
762 DATA ON STORAGE MEDIUM BEING LOST
763 FRAME MEMORY PROBLEM
764 READ/WRITE ERRORS
765 HARD- OR OPTICAL DRIVE PROBLEM
766 FLOPPY DRIVE PROBLEM
767 CD/DVD-ROM DRIVE PROBLEM
768 TAPE PROBLEM
769 DRIVE WILL NOT MOUNT/CANNOT ACCESS DRIVE
76A DISCS EXCHANGE PROBLEM
76B READ/WRITE OPERATION VERY SLOW
76X OTHER 'DATA READ/WRITE' PROBLEM

860 RIBBON/PAPER PROBLEMS

861 RIBBON BROKEN
862 RIBBON STUCK/STICKING
863 RIBBON DERAILED
864 PAPER STUCK/STICKING TO MECHANISM
865 PAPER JAM
866 DOCUMENT JAM
867 ERRONEOUS 'NO INKT/TONER' MESSAGE
86X OTHER 'RIBBON/PAPER' PROBLEM

7 SPECIAL FUNCTIONS

170 GENERAL FUNCTION PROBLEM

171 FAULTY CLOCK FUNCTION
172 FAULTY SLEEP FUNCTION
173 FAULTY TIMER PROGRAMMING
174 FAULTY TIMER OPERATION
175 PROGRAMMING/USER ADJUSTMENT PROBLEM
176 FAULTY RECORD MUTE OPERATION
177 FAULTY PROGRAMMED PLAYBACK OPERATION
178 FAULTY MEMORY FUNCTION
179 FAULTY INPUT SWITCHING
17A FAULTY OUTPUT SWITCHING
17B ELECTRIC SHOCK/STATIC DISCHARGE
17C FAULTY SEARCH FUNCTION (INDEX/VIEW/TITLE/CHAPTER/TRACK...)
17D WRONG LANGUAGE/CHARACTER SET
17E ERROR CODE APPEARS IN DISPLAY
17F SWITCH NOT OPERATING
17G PEDAL NOT OPERATING
17H FAULTY STANDBY MODE
17J FAULTY HIBERNATION MODE
17K NO AUDIBLE WARNING SIGNAL
17L FAULTY OPERATION OF PARENTAL LOCK/KEYLOCK FUNCTION
17M FAULTY MODE SWITCHING
17N MENU FUNCTION PROBLEM
17X OTHER 'GENERAL FUNCTION' PROBLEM

270 SPECIAL COMMUNICATION PROBLEM

271 FAULTY DIALLING
272 FAULTY CHANNEL SELECTION
273 FAULTY AUTO-ANSWER OPERATION
274 FAULTY MESSAGE READ-OUT FUNCTION
275 FAULTY AUTODIAL/REDIAL MEMORY
276 FAULTY SPEECH PROCESSING
277 NO RINGING TONE
278 LOUD/WEAK RINGING TONE
279 MODEM STUCK OFF HOOK
27A FAX DOES NOT WORK PROPERLY
27B MODEM CAUSES PROBLEM WITH PHONE
27C NO MODEM DIAL TONE
27X OTHER 'SPECIAL COMMUNICATION' PROBLEM

370 SPECIAL PICTURE FUNCTION PROBLEM

371 EDITING PROBLEM
372 FAULTY FADING/WIPER OPERATION
373 FAULTY NEGATIVE/POSITIVE SWITCHING FUNCTION
374 FAULTY SUPERIMPOSE/TELOP OPERATION
375 FAULTY PICTURE IN PICTURE/DIGITAL PICTURE OPERATION
376 FAULTY PICTURE TRANSMISSION
377 FAULTY DIGITAL SHUTTER FUNCTION
378 FAULTY GENLOCK FUNCTION
379 FAULTY FLASH/STROBE FUNCTION
37A FAULTY DIGITAL PICTURE/ZOOMING FUNCTION
37B FAULTY AUTO-EDIT FUNCTION
37C FAULTY PICTURE STABILIZER FUNCTION
37D FAULTY PICTURE CAPTURE FUNCTION
37E FAULTY SUBTITLING FUNCTION
37F FAULTY VARIABLE SPEED PLAYBACK
37G FAULTY VIEW-/MULTI-ANGLE SWITCHING
37H FAULTY ASPECT RATIO SWITCHING
37J THUMBNAIL- OR INDEX PICTURE PROBLEM
37K NO BLANKING SCREEN
37X OTHER 'SPECIAL PICTURE FUNCTION' PROBLEM

470 SPECIAL COLOUR FUNCTION PROBLEM

471 FAULTY AUTOMATIC WHITE BALANCE
472 FAULTY COLOUR EFFECTS FUNCTION
47X OTHER 'SPECIAL COLOUR FUNCTION'' PROBLEM

570 POOR SPECIAL AUDIO FUNCTION

571 FAULTY FADE OPERATION
572 FAULTY ECHO OPERATION
573 FAULTY MIXING OPERATION
574 FAULTY REPEAT MODE OPERATION
575 FAULTY AUDIO PROCESSING
576 FAULTY SYNC RECORDING OPERATION
577 FAULTY DBB/DOL OPERATION
578 FAULTY NOISE REDUCTION OPERATION
579 FAULTY AUDIO DUB FUNCTION
57A FAULTY TITLE PROGRAMMING
57B FAULTY MIC CONTROL
57C FAULTY PITCH CONTROL
57X OTHER 'SPECIAL AUDIO FUNCTION' PROBLEM

670 MECHANICAL OPERATION PROBLEM

671 FAULTY START/STOP OPERATION
672 FAULTY PAUSE OPERATION
673 FAULTY AUTOMATIC PROGRAM SEARCH
674 FAULTY CUE/REVIEW MODE
675 FAULTY SLOW MOTION OPERATION
676 FAULTY HIGH-SPEED SCANNING MODE
677 FAULTY SPEED COPY FUNCTION
678 FAULTY REPEAT OPERATION
679 FAULTY RECORD REVIEW MODE
67A FAULTY AMS OPERATION
67B AUTO-REVERSE MALFUNCTION
67C FAULTY END DETECTION
67D FAULTY DISC SIDE (A-B SELECT) SWITCHING
67X OTHER 'MECHANICAL OPERATION' PROBLEM

770 SPECIAL DATA PROCESSING FUNCTION PROBLEM

771 FAULTY SELF-DIAGNOSTIC MODE
772 FAULTY WORD PROCESSING FUNCTION
773 FAULTY GRAPHIC EDIT FUNCTION
774 PROGRAM CANNOT BE INSTALLED
775 PRE-LOADED PROGRAM CANNOT BE STARTED UP
776 NOT PRE-LOADED PROGRAM CANNOT BE STARTED UP
777 VIRUS ALARM
77X OTHER 'SPECIAL DATA FUNCTION' PROBLEM

870

8 OTHER CONDITIONS

180 SPECIAL REQUIREMENTS

181 TEST AND CHECK
182 GENERAL OVERHAUL
183 SYSTEM/FREQUENCY CONVERSION
184 INITIAL SETUP/INSTALLATION REQUES
185 MODIFICATION/CIRCUIT/INSTALLATIO CHANGE
186 WRONG PRODUCT IN CARTON
187 ACCESSORY MISSING
188 UNABLE TO CONNECT PARTS/-TO ASSEMBLE
189 WRONG COLOUR
18B BATTERY MOUNTING PROBLEM
18X OTHER SPECIAL REQUIREMENTS
18Z SYMPTOM NOT AVAILABLE

280 SPECIAL RECEPTION PROBLEM

281 FAULTY STEREO RECEPTION
282 FAULTY MAIN CHANNEL (A) FUNCTION
283 FAULTY SUB-CHANNEL (B) FUNCTION
284 FAULTY SSB RECEPTION
285 FAULTY RDS/VPS/PDC/XDS OPERATIO
286 FAULTY TELETEXT/CLOSE CAPTION/EP RECEPTION
287 FAULTY SATELLITE/RTTY RECEPTION
288 FAULTY FAX OPERATION
289 MODEM NOT RECOGNIZED BY SYSTEM
28A FAULTY CALL CHARGE DISPLAY
28B FAULTY HANDS-FREE OPERATION
28C SET LOCKED
28X OTHER 'SPECIAL RECEPTION' PROBLE

380 PICTURE DISPLAY/PICKUP PROBLE

381 BURN MARK ON DISPLAY/PICKUP
382 SCRATCH ON DISPLAY/PICKUP
383 DUST/DIRT ON DISPLAY/PICKUP
384 PHOSPHOR/PIXEL MISSING ON DISPLAY/PICKUP
385 BRIGHT POINT(S) IN PHOSPHOR/PIXE
386 LINES ACROSS/DOWN IMAGE
387 OUT OF SPECS PIXEL DEFAULTS
388 BACKGROUND BURNT IN
38X OTHER 'PICTURE DISPLAY/PICKUP' PROBLEM

480

580 STEREO/MULTI MODE OPERATION PROBLEM

581 NO STEREO OPERATION
582 POOR CHANNEL SEPARATION
583 DIFFERENCE IN PHASE BETWEEN CHANNELS
584 PROBLEM WITH SURROUND SOUND M
585 PROBLEM WITH PCM AUDIO MODE
58X OTHER 'STEREO/MULTI MODE' PROBL

680 LENS PROBLEM

681 FOCUS PROBLEM
682 ZOOM PROBLEM
683 IRIS PROBLEM
684 MACRO PROBLEM
68X OTHER 'LENS' PROBLEM

780 INTERFACE PROBLEM

781 USB INTERFACE PROBLEM
782 PARALLEL INTERFACE PROBLEM
783 SCSI INTERFACE PROBLEM
784 SERIAL INTERFACE PROBLEM
785 INCOMPATIBLE WITH OTHER SYSTEM
786 AUDIO/VIDEO INTERFACE PROBLEM
787 i.LINK/FIREWIRE/IEEE1394 INTERFACE PROBLEM
78X OTHER 'INTERFACE' PROBLEM

880 FAULTY FONT/CHARACTER FUNCTI

881 INCORRECT CHARACTERS OR IMAGE
882 INCORRECT CHARACTER SIZE
883 FONT LOADING PROBLEM
88X OTHER 'FAULTY FONT/CHARACTER FUNCTION' PROBLEM

EACEM - SECTION CODES

COMMON	
ANT	ANTENNA SECTION
APR	SIGNAL PROCESSING (ANALOG)
BCH	BATTERY CHARGE
CLK	CLOCK/TIMER SECTION
CPA	COLOUR PROCESSING/ANALOG
CTR	CONTROL PANEL
DPR	SIGNAL PROCESSING (DIGITAL)
ERA	ERASE CIRCUIT
FLX	FLEXIBLE PRINTED CIRCUIT BOARD
HFS	HIGH FREQUENCY SECTION (RF)
IDS	INFORMATION DISPLAY SECTION
IFC	IF-CIRCUIT
ILN	i.LINK (IEEE1394) SECTION
INP	SIGNAL INPUT SECTION
IRD	INFRARED (IrDA) SECTION
MEM	MEMORY CIRCUIT
OUT	SIGNAL OUTPUT SECTION
PRG	PROGRAMMING SECTION
PRT	PROTECTION CIRCUIT
PSU	POWER SUPPLY
PWA	POWER AMP SECTION
REM	REMOTE CONTROL SECTION
RFU	BOOSTER,RF UNIT
SFT	SOFTWARE (TAPE, DISC, ETC.)
SNS	SENSOR UNIT
SVO	SERVO SECTION
SYS	SYSTEM CONTROL SECTION
TUN	TUNING SECTION
TXT	TEXT PROCESSING

SOUND-RELATED	
APA	AUDIO PROCESSING/ANALOG
APD	AUDIO PROCESSING/DIGITAL
CDC	CD CHANGER SECTION
CDS	CD SECTION
MDC	MD CHANGER SECTION
MDS	MINIDISC SECTION
MIC	MICROPHONE SECTION
PUD	PICK-UP DEVICE
SHD	STATIONARY HEAD(S)
SPK	SPEAKER

PICTURE-RELATED	
CAM	CAMERA CIRCUIT
CPD	COLOUR PROCESSING/DIGITAL
CRT	PICTURE TUBE
DFL	DEFLECTION CIRCUIT
DVD	DVD SECTION
FPK	FOCUS PACK
IMG	IMAGE DISPLAY UNIT

PICTURE-RELATED	
LCD	LCD SECTION
LMP	LAMP/FLASH SECTION
VPA	VIDEO PROCESSING/ANALOG
VPD	VIDEO PROCESSING/DIGITAL
VWF	VIEWFINDER

PC-RELATED	
FDD	FLOPPY DISC DRIVE
FMW	FIRMWARE
HDD	HARD DISC DRIVE
ISA	ISA SECTION
JST	JOYSTICK
KBD	KEYBOARD (SEPARATE)
MDM	MODEM SECTION
NIF	NETWORK INTERFACE
PAR	PARALLEL PORT
PCC	PC CARD
PCI	PCI SECTION
SCS	SCSI PORT
SER	SERIAL PORT
USB	USB PORT

MECHANICAL	
ARM	ARM MECHANISM
BZL	BEZEL
CBT	CABINET
CHA	CHASSIS
DDM	DISC DRIVE MECHANISM
EXC	EXTERNAL CONNECTOR
HCM	HEAD CARRIAGE MECHANISM
HOL	CASSETTE HOLDER
INC	INTERNAL CONNECTOR
LDG	LOADING MECHANISM
LNM	LENS MECHANISM
PFM	PAPER FEED MECHANISM
PIN	PINCH ROLLER/LEVER
PRI	PRINT BLOCK
RFM	RIBBON FEED MECHANISM
RHD	ROTARY HEAD(S)
SLD	SLED MECHANISM
SRS	SUPPLY REEL SECTION
STA	STATIC BLOCK
TDM	TAPE DRIVE MECHANISM
THR	THREADING MECHANISM
TNR	TENSION REGULATOR
TPT	TAPE PATH
TRS	TAKE-UP REEL SECTION
WIR	LEAD WIRE
XXX	CABINET/COSMETIC PARTS

EXAMPLE OF USE:

FLAG	SYMPTOM CODE	PART NO.	REF. NO.	SECTION	PCB	DEFECT CODE	REPAIR CODE	QTY
1 .	1 4 1 2 3 6 4 1	1 1 1 1 1 1 1 1 1 1 1 1 1 1 1 1 3 4 5 6 7 8 9 X X X X X X X X X	R 1 2 3 . . . . 1 1 1	T D M	Y A 2 2 . . .	C 1	Z 1	. . . .

FLAG: INDICATES THE ONE MAJOR SYMPTOM/PART COMBINATION BY '1'

DEFECT CODES

MECHANICAL

A	WORN OUT (OR GENERAL MECHANICAL DEFECT)
A1	MISOPERATING
B	DIRTY, CLOGGED
C	MECHANICALLY MISALIGNED
D	CUT, BROKEN
E	DEFORMED
F	SNAPPED
G	SCRATCHED, DENTED, SHARP EDGES
H	CRACKED, PEELED, CORRODED, MELTED
I	LOOSE/OFF/STRIPPED
J	SHAKY, UNSTABLE
K	LEAKING (MECHANICAL)
L	DRY (NO LUBRICANT)
M	FOREIGN OBJECT

ELECTRICAL

N	DEFECTIVE ELECTRICAL COMPONENT/MODULE
O	BURNT, ARCING, MISSING PIXELS
P	ELECTRICALLY MISALIGNED/WRONG SETTING
Q	SHORT CIRCUIT
R	OPEN CIRCUIT
S	LEAKING (ELECTRICAL)
T	BAD CONTACT, CONNECTION
T1	BAD EARTH CONNECTION
U	OPEN PATTERN
V	CRACKED PRINTED CIRCUIT BOARD
W	COLD OR NO SOLDERING
X	BRIDGED SOLDERING
Y	WRONG COMPONENT/MODULE
Z	MISSING COMPONENT/MODULE
1	SOFTWARE PROBLEM
11	LOSING DATA FROM MEMORY
12	FAULTY PROGRAM SETTING/INSTALLATION
13	SOFTWARE DEFECTIVE OR INCOMPLETE
14	SOFTWARE SETUP PROBLEM
15	NO IDENTIFICATION / AUTHENTICATION OF PRODUCT OR USER
2	EXHAUSTED, LOW EMISSION
3	NO PROBLEM FOUND (SET WITHIN SPEC)
4	NO PROBLEM FOUND - CUSTOMER MISUNDERSTANDING
5	NO PROBLEM FOUND - LOCAL CONDITIONS
51	FAULTY MAINS VOLTAGE
6	UNABLE TO DIAGNOSE FAULT
7	INCORRECTLY WIRED/ASSEMBLED
81	INCORRECT EQUIPMENT CONNECTION
9	CUSTOMER MISUSE
93	UNAUTHORISED MODIFICATION

REPAIR CODES

A	REPLACEMENT
B	MECHANICAL ALIGNMENT
C	ELECTRICAL ALIGNMENT
D	RESOLDERING
D1	REFITTING, PUT BACK IN POSITION (CONNECTOR, TUBE...)
E	CLEANING
F	LUBRICATION
G	REPAIRED ELECTRICAL PARTS
H	REPAIRED MECHANICAL PARTS
I	MODIFICATION REQUESTED BY MANUFACTURER
J	REMOVED
K	ADDED
L	FUNCTIONAL CHECK
M	SPECIFICATION MEASUREMENT
N	MAINTENANCE
O	REFURBISHING, RECONDITIONING
P	PREVENTIVE PARTS REPLACEMENT

Q	PREVENTIVE ACTION WITHOUT PARTS REPLACEMENT
U	EXPLANATION FOR CUSTOMER
V	COST ESTIMATION REFUSED
W	COST ESTIMATION WITH PARTS
X	COST ESTIMATION WITHOUT PARTS
Y	RETURN WITHOUT REPAIR
Z	PRODUCT EXCHANGE
Z1	PRODUCT EXCHANGE (REPAIR TOO EXPENSIVE)
Z2	PRODUCT EXCHANGE (TOO MANY VISITS/REPAIRS)
Z3	PRODUCT EXCHANGE (PARTS NOT AVAILABLE)
Z4	PRODUCT EXCHANGE (IMPOSSIBLE TO REPAIR)
Z5	PRODUCT EXCHANGE (ON REQUEST OF RETAILER)
Z6	PRODUCT EXCHANGE (ON REQUEST OF MANUFACTURER)
1	SOFTWARE CORRECTION/RESET
2	SOFTWARE UPGRADE
3	PRODUCT UPGRADE (ON REQUEST)

INTEGRATED CIRCUITS BLOCK DIAGRAMS - SYNOPTIQUES INTERNES DES CIRCUITS INTEGRES - INTEGRIERTE SCHALTUNGEN BLOCKSCHALTBILDER - SCHEMA A BLOCCHI DEL CIRCUITI INTEGRATI - VISTA INTERNA DE LOS CIRCUITOS INTEGRADOS

TDA9351N1 MICROPROCESSOR

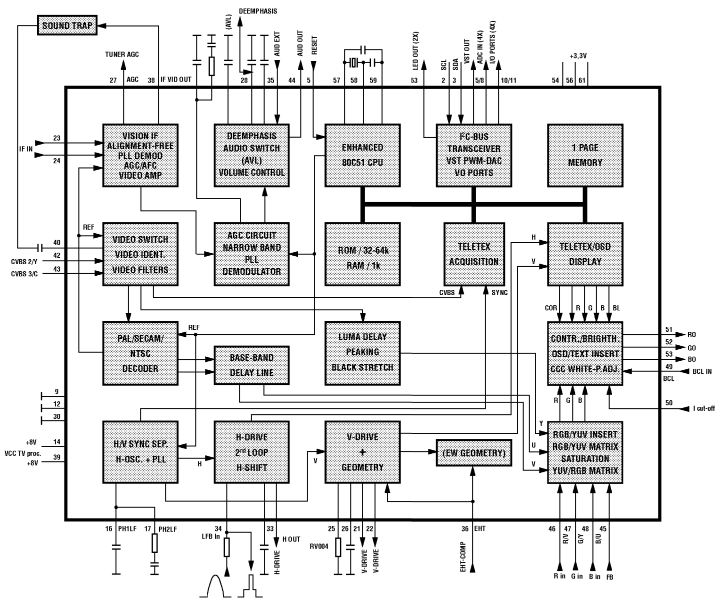

TDA9367N1 MICROPROCESSOR

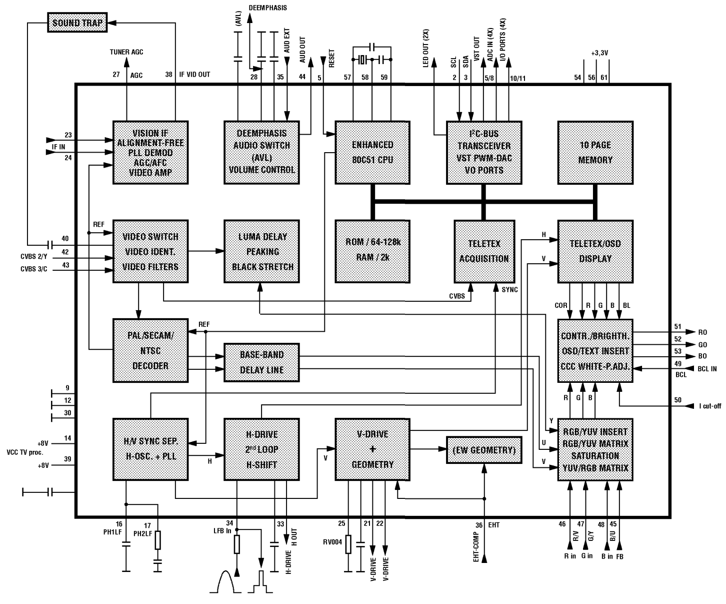

MSP 3415D

MULTISTANDARD SOUND PROCESSOR

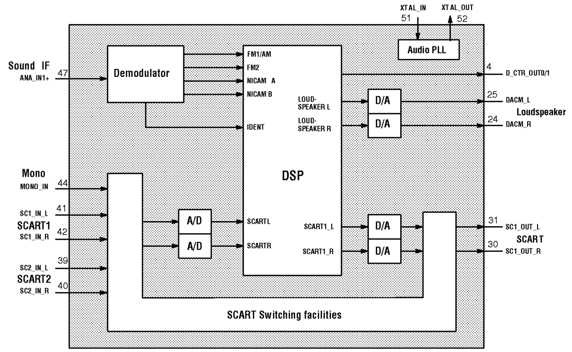

AUDIO BASEBAND PROCESSING

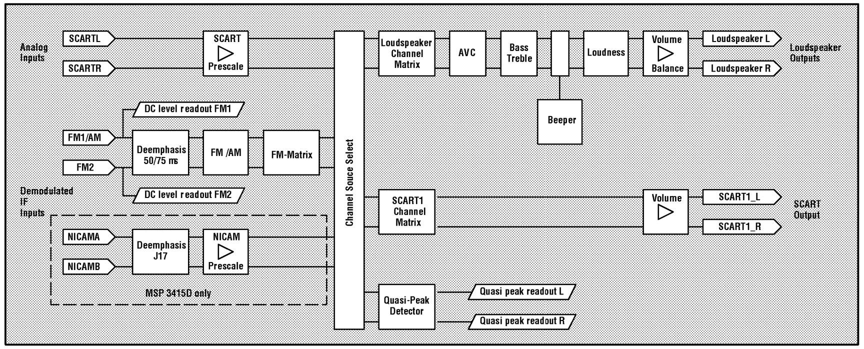

DETECTION PART OF THE MSP3415D

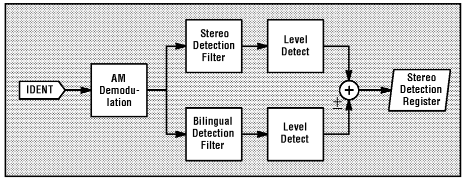

LOGIC CONTROL II20 - IV01

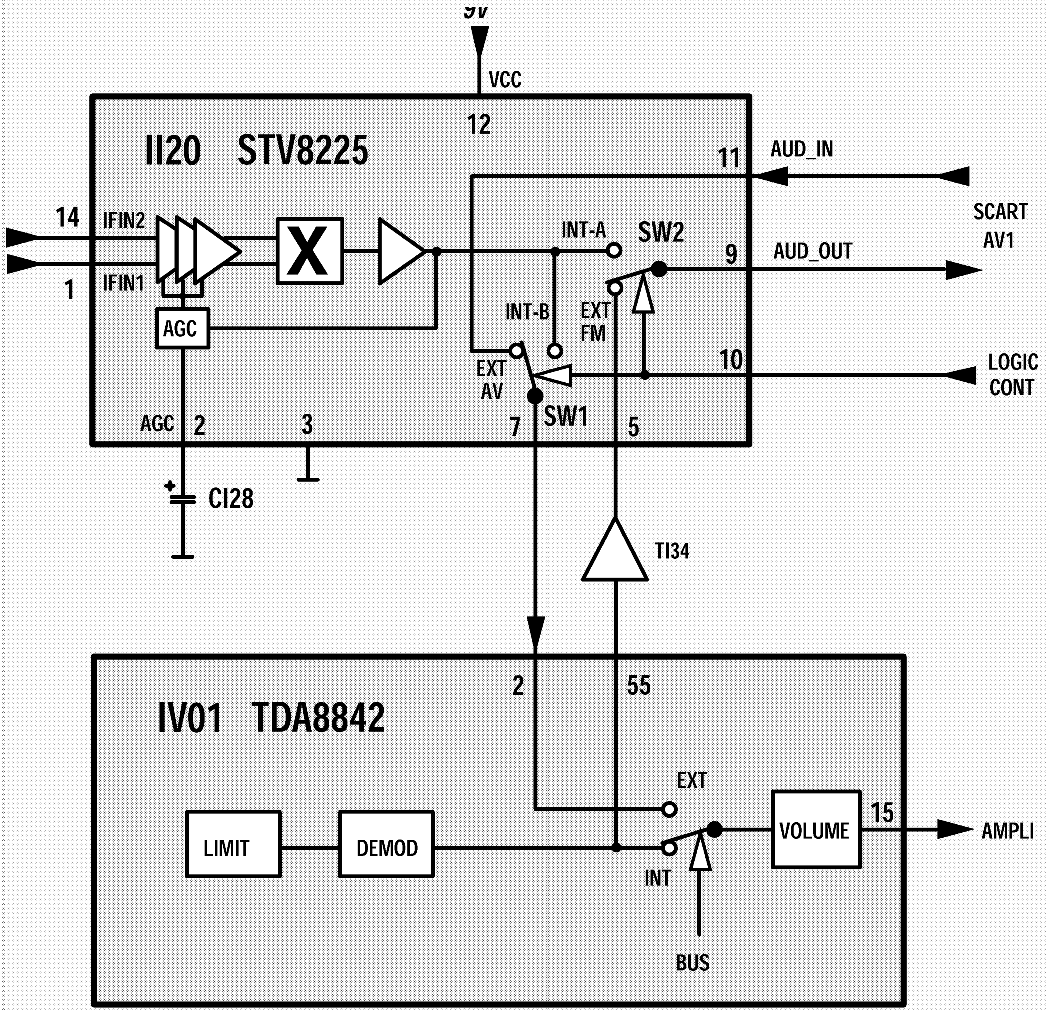

	Logic Control PIN 10 / II20	IV01	II20
BG	0V	INT	SW2 : EXT-FM
LL'	3V	EXT	SW1 : INT- B SW2 : INT- A
LL' AV	5V	EXT	SW1 : EXT-AV SW2 : INT- A
BG AV	7.5V	EXT	SW1 : EXT-AV SW2 : EXT-FM

POWER SUPPLY CHECKS

⚠ Use an isolation transformer when repairing a defective set.

No voltage

+300V voltage absent on CP08. Carry out the following tests :

- Mains supply voltage present ?

If correct:

- Check FP01 and RP01
  - If FP01 is open circuit : check degaussing RP02
  - If FP01 or RP01 are open circuit : check TP20
    - If TP20 is short circuit check : replace TP20, TP22 and TP23

TP20 does not switch

Correct voltage present on CP08 but TP20 is not switching.
Carry out the following tests :

- Voltage the gate of TP20 :

  No voltage or < 2V ?
  - check TP20 and RP20.
    - If TP20 or RP20 is open circuit : replace TP22 and TP23 ,RP20,TP20.

- Check DP27, DP21, TP25, DP25, RP21, RP90

- Check TP22 and TP23.

System UB voltage too low

If the operating conditions described below (+300V/CP08, TP020 switching) are correct:
- Check IP01, IP50 and TP52.

POWER SUPPLY CHECKS, LOW VOLTAGE METHOD

- Carefully discharge capacitor CP08
- Shunt resistors RP05 to RP07 using a 10-K resistor.
- Connect point 9 of LP03 to the junction point of RP05/CP06.
- Earth the base of TP52 (to prevent instability).
- Earth the base of TR08 (JR24) (forcing standby to prevent instability).
- Connect a 12V DC supply to pin 9 of LP03.

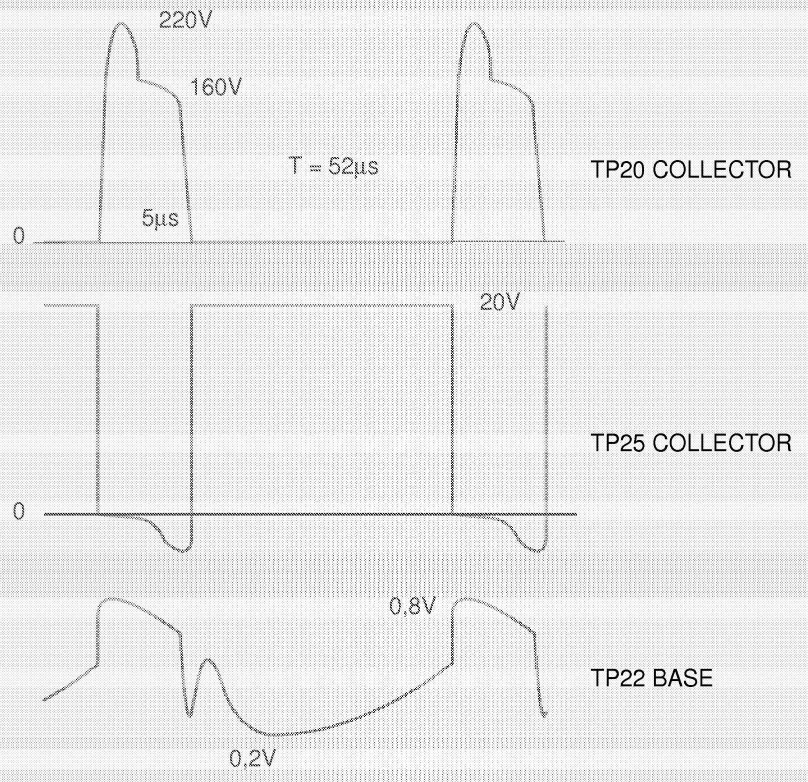

UB = 104V, UA = 12,4V

POWER SUPPLY CHECKS USING A LOAD RESISTOR

- Disconnect pin 1 from LL05.
- Earth the base of TP52 (to prevent instability at switch "ON").
- Connect the mains supply voltage .
  Collector TP20 : 580Vpp, T=20µs.
  UB = 104V

- Load the UB supply rail with 220V / 75W bulb.
  Collector TP20 : 580Vpp, T=10µs.
  UB= 104V.

(A) DIFFERENCES BETWEEN EUROPE AND ASIA

POSITION	EUROPE	ASIA
RI48	220R	180R
RI49	150R	180R
CP08	100uF/400	220uF/450V
CP09	1N5F	2N2
DP01	RS205L-L105	RS255-K105
DP82	DELETE	ADD
JP02	AD	DELETE
LP02	OREGA 12MH	PANASONIC
LP03	OREGA SMT17	FRONTIER SRV-3513
RP01	5R1/5W	2R7
RP01B	DELETE	POS 5R0
RP02	ADD 18R0	DELETE
RP02A	DELETE	ADD 5R0
RP03	DELETE	5R
RP05/06/07	270K/0.25W	120K/0.25W
RP41	22K	18K
TP20	STP3NA80FI	STP5N80FI
ZP01	DELETE	EAZV10D471
DR04	1N4148	DELETE
IR01(TXT)	VT01	VT02
IR01(W/O TXT)	VN01	VN02
LR03	0R	0R
LR04	0R	0R
RR16	220R	3K6
RR17	1K	3K6
RR18	1K	3K6
RR19	1K	3K6
RR20	DELETE	680R0
RR24	ADD	DELETE
RR50	1K	0R
RR80	DELETE	ADD
RR81	ADD	DELETE
CV24	ADD	DELETE
CV25	ADD	DELETE
CV26	ADD	DELETE
CV40	DELETE	ADD
JV58	DELETE	ADD
JV59	DELETE	ADD
JV60	DELETE	ADD
RV16	ADD	DELETE
RV17	ADD	DELETE
RV18	ADD	DELETE
RV19	ADD	DELETE
RV20	ADD	DELETE
RV21	ADD	DELETE
RV22	ADD	DELETE
RV23	ADD	DELETE
RV34	ADD	DELETE
RV35	62R	75R
RV36	ADD	DELETE
RV42	DELETE	ADD
RV44	15R	0R
TV01	ADD	DELETE
TV02	ADD	DELETE
TV03	ADD	DELETE
TV04	ADD	DELETE
TV05	ADD	DELETE
TV06	ADD	DELETE
TV07	ADD	DELETE
TV08	ADD	DELETE
DX04	DELETE	ADD
RX01	390R0	4K7
RX02	390R0	4K7
RX03	390R0	4K7
RX04	220R0	3K3
RX11	6K2	6K2
TX02	ADD	DELETE
BE01	SCART	CINCH

(B) DIFFERENCES BETWEEN 14" AND 20"/21" (CRT BOARDS, POWER)

POSITION	14"	20"/21"
CT51/61/71	820P	270P/330P
CT52/62/72	680P	DELETE
DT51/61/71	JUMPER	1N4148
DT52/62/72	1N4148	DELETE
DT53/63/73	JUMPER	BAT85
RT51/61/71	10K	12K
RT55/65/75	DELETE	1K
RT56/66/76	220R	150R
RT59/69/79	DELETE	47R
TT51/61/71	DELETE	BF422
CP23	1N5/50V	2N2/50V
CP90	1000UF/16V	1000UF/25V
DP27	24V	27V
DP40	24V	27V
DP82	DELETE	BYW76
LP90	JUMPER	DELETE
LP91	DELETE	JUMPER
RP29	15K	22K
RP37	18K	33K
RP53	10K	15K
RP90	0.22/0.25W	0.22/0.35W
SP01	DELETE	DELETE

(C) DIFFERENCES BETWEEN MINI NECK AND NARROW NECK PICTURE

POSITION	MINI	NARROW
JT81	ADD	DELETE
JT82	DELETE	ADD
JT83	DELETE	ADD
JT84	ADD	DELETE

(D) PICTURE TUBE MATCHING

CRT	14" CHUNG HWA	14" POLCOLOR	14" THAI CRT	14" ORION	20" CHUNG HWA	20" VIDEOCOLOR	21" CHUNG HWA	21" VIDEOCOLOR
RF09/K	1.37	1.5	1.5	1.37	1.82	1.58	1.82	1.58
RF17/K	1.37	1.5	1.5	1.37	1.82	1.58	1.82	1.58
CL10/pF	680	560	560	680	820	680	680	680
RL14/R	1.0/1W	0.47/1W	1.0/1W	1.0/1W	0.47/1W	0.47/1W	0.47/1W	0.47/1W
LL05	20820700	20820700	20820700	20820700	20801770	20801770	20801770	20801770
	20840590	20840590	20840590	20840590	20835940	20835940	20835940	20835940
CL04/nF	6.6	6.6	6.6	6.6	8.8	6.6	8.2	6.6
CL05/nF	390	470	470	390	470	390	390	390
CL08/nF	-----	-----	-------	--------	-------	--------	-------	-------
CL33/nF	-----	-----	------	------	1	1	1	1
DL08	-----	-----	------	------	------	------	------	------
FL01	JUMPER	JUMPER	JUMPER	JUMPER	JUMPER	JUMPER	JUMPER	JUMPER
LL03/uH	-----	-----	------	------	58	58	58	58
LL08/uH	JUMPER	JUMPER	JUMPER	JUMPER	JUMPER	JUMPER	JUMPER	JUMPER
RL03/K	-----	-----	------	1k/1W	1k/1W	1k/1W	1k/1W	1k/1W
RL07/R	39/1W	39/1W	39/1W	39/1W	33/1W	33/1W	33/1W	33/1W
TL02	S2000N	S2000N	S2000N	S2000N	S2000N	S2000N	S2000N	S2000N
RL07/R	22/1W	22/1W	22/1W	22/1W	15/1W	15/1W	15/1W	15/1W
TL02	BUH515TH	BUH515TH	BUH515TH	BUH515TH	BUH515TH	BUH515TH	BUH5125TH	BUH515TH
RL08/K	-----	-----	------	------	------	------	------	------
RL09/K	3.9	3.9	3.9	3.9	5.6	5.6	5.6	5.6
RL10/K	15.0	15.0	15.0	15.0	13.0	13.0	13.0	13.0
RL12/R	0.68	0.22	0.68	0.68	0.22	0.22	0.22	0.22
RL20/R	15/.5W	15/.5W	15/.5W	15/.5W	47/.35W	47/.35W	47/.35W	47/.35W
RL41/K	22	22.0	22.0	22.0	18.0	18.0	18.0	18.0
RL62/K	82.5	82.5	82.5	82.5	41.2	41.2	41.2	41.2
RP54/K	2	2.0	2.0	2.0	1.82	1.82	1.82	1.82
UB/V	105.5	105.5	105.5	105.5	115.5	115.5	115.5	115.5
RH07	3K9	3K9	3K9	3K9	4K7	4K7	4K7	4K7
DT52/62/72	RCF1K2	RA2K2	TBC	TBC	1K2	1K2	1K2	1K2
RT57/67/77	1N4148	BAV21	TBC	TBC	-	-	-	-

(F) DIFFERENCES FOR 5W ASIA/EUROPE ACOUSTIC REQUIREMENTS

POSITION	EUROPE	ASIA
CA03	22nF	39nF
RA03	15K	7K5
RA04	5k6	7k5
RA05	2K7	JUMPER

(G) DIFFERENCES FOR JA01 OPTIONS

POSITION		
JA01	WITH HEADHONE (BE02), JA01 DELETED.	
	WITHOUT HEADHONE (BE02), JA01 ADDED.	

(H) DIFFERENCES FOR SCART AND CINCH CONNECTORS

POSITION	SCART WITH II20	SCART WITHOUT II20	CINCH WITHOUT II20
RI02	7K5	10K	5K6
RI03	7K5	10K	5K6
RI72	510R	18K	27K
RI73	560R	4K7	2K
CA21	330pF	470pF	470pF
CI01	270pF	270pF	270pF
CI02	270pF	270pF	270pF

(I) FOR MACROVISION

POSITION	OTHERS	LL' SETS	REMARK
CI42	MPC47nF	5mm JUMPER	SOLDERED ON COPPER SIDE
* JV38	10mm JUMPER	CC 47nF	
CI80	DELETE	CC 47nF	
CV31	CC47nF	DELETE	

* REFER TO PART LIST

(E) DIFFERENCES AMONG AUDIO OUTPUT POWER REQUIREMENT

POSITION	1.2W (14"EUROPE)	3W (14" ASIA)	5W (20"/21"ASIA/EU)
CA03	15nF	22nF	22nF
CA04	15nF	10nF	22nF
CA06	DELETE	100nF	100nF
CA09	DELETE	4n7F	4n7F
IA21	DELETE	TDA7253	TDA7253
IA22	TDA7267	DELETE	DELETE
* JA06	DELETE	JUMPER	JUMPER
* JA07	DELETE	JUMPER	JUMPER
* JA08	DELETE	JUMPER	JUMPER
LA01	LP03=Orege SMT use47uH	JUMPER	JUMPER
	LP03=TDK SMT USE 22uH		
RA03	12K	12K	15K
RA04	6K8	33K	5K6
RA05	2K7	180R	2K7
RA06	4K7	DELETE	DELETE
RA13	DELETE	4R7	4R7
RA25	DELETE	1K2	1K2
RA26	DELETE	47R	47R
RA22	3K3	2K4	2K4
RA31	1R5	22R	22R
CA24	DELETE	ADD	ADD

* REFER TO PART LIST

(J) DIFFERENCES BETWEEN BGHILL' - BGDKK' - BG AND I

POSITION	BGHILL' (VST)	BGDKK	BG	I	BGHILL'(FST)
CI20	1NF	-	-	-	1NF
CI21	10uF	-	-	-	100uF
CI23	22NF	-	-	-	22NF
CI24	22NF	-	-	-	22NF
CI27	22uF	-	-	-	22uF
CI28	10uF	-	-	-	10uF
CI37	22NF	22NF	-	-	22NF
CI38	22NF	22NF	-	-	22NF
CI39	1NF	1NF	-	-	1NF
CI40	-	-	-	-	-
CI50	1P5F	-	-	-	1P5F
CI60	4N7F	4N7F	-	-	4N7F
CI61	2P7F	5P6F	-	-	2P7F
CI62	2P7F	5P6F	-	-	2P7F
CI63	22PF	39PF	-	-	22PF
CI64	47PF	47PF	-	-	47PF
DI20	BA282	-	-	-	BA282
DI21	BA282	-	-	-	BA282
DI31	BA282	BA282	0R	-	BA282
DI32	BA282	BA282	-	0R	BA282
DI33	1N4148	-	-	-	1N4148
DI34	0R	-	-	-	0R
DI60	BA282	BA282	-	-	BA282
II20	STV8225	-	-	-	STV8225
JI06	-	-	-	-	-
JI21	-	0R	0R	0R	-
JI22	-	220R	220R	220R	-
JI23	-	-	-	-	-
JI24	-	0R	0R	0R	0R
JI25	0R	-	-	-	0R
JI26	0R	-	-	-	0R
* JI35	0R	0R	0R	-	0R
* JI36	0R	0R	-	-	0R
* JI37	0R	0R	-	-	0R
JI63	0R	0R	-	-	0R
LI30	LA 7X7 77.8MHz 135NH	LA 7X7 77.8MHz 150NH	LA7X7 77.8MHz 150NH	LA7X7 77.8MHz 150NH	LA7X7 77.8MHz 135NH
LI32	LF 4U7H	LF 3U9H	LF 4U7H	LF 4U7H	LF 3U9H
LI61	LA 7X7 32.4MHz	LA 7X7 29.65MHz	-	-	LA7X7 32.4MHz
QI20	FILSWL9456M	-	-	-	FILSWL9456M
QI30	FILSWG1967M	FILSWK2967M	FILSWG1962M	FILSWJ1952M	FILSWG1967M
QI31	FILC 5M5Hz	FILC 5M5Hz	FILC 5M5Hz	-	FILC 5M5Hz
QI32	FILC 6M0Hz	FILC 6M5Hz	-	FILC 6M0Hz	FILC 6M0Hz
QI33	FILCTRP 5M74Hz	FILCTRP 5M74Hz	FILCTRP 5M74Hz	-	FILCTRP 5M74Hz
QI34	FILCTRP 6M0Hz	FILCTRP 6M5Hz	-	FILCTRP 6M0Hz	FILCTRP 6M0Hz
RI11	180R	68R	68R	68R	180R
RI13	4K7	4K7	8K2	8K2	8K2
RI17	22R	39R	47R	47R	10R
RI20	2K2	-	-	-	2K2
RI21	6K8	-	-	-	6K8
RI22	10K	-	-	-	10K
RI23	10K	-	-	-	10K
RI24	100R	-	-	-	100R
RI38	1K8	1K8	-	-	1K8
RI39	1K8	1K8	-	-	1K8
RI40	-	-	-	-	
RI41	4K7	4K7	-	-	4K7
RI45	120R	100R	120R	120R	100R
RI56	12K	0R	0R	0R	12K
RI57	-	47R	47R	47R	-
RI58	-	1K	1K	1K	-
RI60	3K9	3K9	-	-	3K9
RI61	2K7	2K7	-	-	2K7
RI62	2K7	2K7	-	-	2K7
RI63	2K7	22K	-	-	2K7
RI64	150K	150K	-	-	150K
TI20	DTC144EK	-	-	-	DTC144EK
TI21	DTC144EK	-	-	-	DTC144EK
TI32	DTC144EK	DTC144EK	-	-	DTC144EK
TI35	-	BC548B	BC548B	BC548B	-
TI60	BC848B	BC848B	-	-	BC848B
CR15	10UF	-	-	-	10UF
CR17	100PF	100PF	-	-	100PF
CR27	220PF	-	-	-	220PF
CR38	1NF	-	-	-	1NF
* JR11	0R	-	-	-	0R
* JR13	0R	-	-	-	0R
LR11	0R	0R	-	-	0R
RR28	1K5	-	-	-	1K5
RR29	3K3	-	-	-	3K3
RR44	1K	1K	-	-	1K
RR51	10K	-	-	-	10K
RR66	100R	100R	-	-	100R
TR06	BC848B	-	-	-	BC848B

* REFER TO PART LIST

WARNING : *Before servicing this chassis read the safety recommendations.*

ATTENTION : *Avant toute intervention sur ce châssis, lire les recommandations de sécurité.*

ACHTUNG : *Vor jedem Eingriff auf diesem Chassis, die Sicherheitsvorschriften lesen.*

ATTENZIONE : *Prima di intervenire sullo chassis, leggere le norme di sicurezza.*

IMPORTANTE : *Antes de cualquier intervención, leer las recomendaciones de seguridad.*

Do not disconnect modules when they are enregized! Repairs on power supply section are to be carried out only with isolating transformer.

Ne pas retirer les modules lorsqu'ils sont sous tension. N'effectuer les travaux de maintenance sur la partie reliée au secteur (Switch Mode) qu'au travers d'un transformateur d'isolement.

Module nicht bei eingeschaltetem Gerät entfernen ! Servicearbeiten am Netzteil nur unter Verwendung eines Regeltrenntrafos durchführen.

Non scollegare i moduli quando sono alimentati! Intraprendere riparazioni sulla sezione alimentatore solo con trasformatore isolante.

No desconectar los módulos cuando están activados. Las reparaciones en la sección de alimentación de energía deben ser ejecutadas solamente con un transformador de separación.

⚠ Indicates critical safety components, and identical components should be used for replacement. Only then can the operational safety be garanteed.

Le remplacement des éléments de sécurité (repérés avec le symbole ⚠) par des composants non homologués selon la Norme CEI 65 entraine la non-conformité de l'appareil. Dans ce cas, la responsabilité du fabricant n'est plus engagée.

Wenn Sicherheitsteile (mit dem Symbol⚠ gekennzeichnet) nicht durch Original - Ersatzteile ersetzt werden, erlischt die Haftung des Herstellers.

La sostituzione degli elementi di sicurezza (marcati con il segno⚠) con componenti non omologati secondo la norma CEI 65 comporta la non conformitá dell'apparecchio. In tal caso è "esclusa la responsabilità " del costruttore.

La sustitución de elementos de seguridad (marcados con el simbolo ⚠) por componentes no homologados segun la norma CEI 65, provoca la no conformidad del aparato. En ese caso, el fabricante cesa de ser responsable.

Note : During measurements in the power supply unit, use the primary power unit ground (Emit. TP060).

Attention : Mesures dans le bloc alimentation. Utiliser la masse du bloc alimentation (Emet. TP060).

Achtung : Bei Messungen im Primärnetzteil. Primärnetzteilmasse verwenden (Emit. TP060).

Attentionze : Misure nell'alimentatore primario. Usare massa alimentazione primario (Emet. TP060).

Cuidado : Medida en el bloque de alimentación. Utilizar la masa del bloque de alimentación (Emet. TP060).

MEASUREMENT CONDITIONS - CONDITIONS DE MESURES - MESSBEDINGUNGEN
CONDIZIONI DI MISURA - CONDICIONES DE MEDIDAS

RECEIVER :
Bar test pattern : PAL, I standard, 100% white.

- On UHF, input level 1 mV
- Via the scart socket, input level 1 Vpp

Colour, contrast and brightness at mid-position, sound at minimum.
Programme selected : PR 01.
DC voltages measured between the point and earth using a digital voltmeter.

RECEPTEUR :
Mire de barres : SECAM, Norm L, Blanc 100%.

- En UHF, niveau d'entrée 1 mV
- Par la prise Péritélévision, niveau d'entrée 1Vcc.

Couleur, contraste, lumière à mi-course, son minimum.
Programme affecté PR 01.
Tensions continues relevées par rapport à la masse avec un voltmètre numérique.

EMPFÄNGER :
Farbbalken : PAL, Norm G, Weiss 100%

- Bei UHF Eingangspegel 1 mV.
- Über die Scartbuchse : Eingangspegel 1 Vss.

Farbe, Kontrast, Helligkeit in der Mitte des Bereichs, Ton auf Minimum.
Zugeordnetes Programm PR 01.
Gleichspannungen mit einem digitalen Voltmeter zur Masse gemessen.

RICEVITORE :
Monoscopio per barre : PAL, norma G. bianco 100%.

- In UHF, livello d'entrata 1 mV,
- Per la presa SCART, livello d'entrata 1 Vcc.

Colore, Contrasto, Luce a metä corsa, Suono minimo.
Programma designato PR 01.
Tensioni continue rilevate rispetto alla massa con un voltametro numerico.

RECEPTOR :
Mira de barras : PAL, norma G, blanco 100%.

- En UHF, nivel de entrada 1 mV,
- Por la toma Peritelevision, nivel de entrada 1 Vpp.

Color, Contraste, luz a mitad de carrera, Sonido minimo.
Programa afectado PR 01.
Tensiones continuas marcadas en relacion a la masa con un voltimetro digital.

THOMSON MULTIMEDIA

TV

Brandt FERGUSON NORDMENDE SABA TELEFUNKEN THOMSON

PARTS LIST
LISTE PIECES DETACHEES
ERSATZTEILLISTE
LISTA PARTI DI RICAMBIO
LISTA DE PIEZAS DE REPUESTO

FERGUSON
M5115UT
Chassis TX807

MODULES

MAIN T807V26C705030

FL01	RXE017	⚠	10529690
IA21	TDA7253		20203120
IF01	TDA9302H		20819860
II01	KIA78L09BP		20835320
IP50	TL431		15069010
IR01	TMP47C1637N TX807-VT11		20925200
IR02	ST24W04		20659470
IV01	TDA8842		20751980
IX01	STV5348D		20765620

IP01	TLP621 GR(D4-LF2 T)	⚠	20827900
TA21,TI35, TR01,TX02	BC548B		16000930
TA22	BC557B		16001060
TA23,TL01	BC337-40		45001466
TH01,TP22,52, TR05,08	BC547B		16000890
TH02,03,04	BC857C SMD		50854389
TI11	MMBTH10L SMD		16006500
TI31,33,34, TR04,09,TV01, 02,04,06	BC847B SMD		11070770
TL02	S2000N/BU508A		20578720
TL03,TT81	BC327-40		16000450
TL50	2SC2236Y		16000220
TP20	STP3NA80FI	⚠	20818740
TP23	BC327-25		16000440
TP25,TX01,03	BC558B		16001110
TR02	BCR185 SMD		16006900
TR03	BC848C SMD		20438166
TR07	2SA1020Y		16003740
TR10	BC547C		16000900
TT51,61,71	BF422		16003090
TT52,62,72	2SC2482N		16003760
TT53,63,73	BF423		16003110
TV03,05,07	RN2410		20824180
TV08	RN1409 SMD		20688820

DA01,DK05, DL60,63,DP37, 38,DR03,04, DT51,61,71, DV01,04,05,06, 09,10,11,DX01, 02,03	1N4148	44009209
DA02,DT82	BZX55B9V1	70438220
DF01,DL05,06, 15,20,45,47, 50,DP25,90	RGP10G	10459090
DH01	ZTK33A	20494820
DK01	MV5491A LED	10036730
DK04	BZX55C5V6/ZPD5V6	44025401
DL01	1N4001	16008160
DL04	BY228	10406470
DL21,DP26	BAV21	44044407
DL25,DP27,40	BZX55C27	60447870
DL51	1N5233B	20264850
DL62	ZPD4,7/BZX55C4V7	20475400
DP01	RS205L-K105	20807220
DP21	BZX55B15/ZPD15 2%	80444020
DP23,30	ZPD8,2	44021504
DP57	BZX55C6V8	50890650
DP80	BYW76	16009120
DR02	BZX55B5V1/ZPD5V1 2%	44035702
DV03	MUR115/BYW100-150	44073604
DX05	BZX55C3V3	30948790

QC01	4M433619HZ	10087710
QC02	3M579545HZ	10087720
QI30	OFWJ1952M FOS	20232080
QI32	6M0HZ	48039700
QI34	6M0HZ	48042300
QR01	6M0HZ	20767900
QX01	13M875HZ	10253990

LI30	77M8HZ	20862330

RA13	4R7 OHM 5% 0,25W	⚠	35032200
RL12,16,RP90	0R22 OHM 5% 0,50W	⚠	10305450
RL14	0R47 OHM 5% 1W	⚠	15042720
RL20	47R0 OHM 5% 0,30W	⚠	13000690
RL45	0R1 OHM 10% 0,40W	⚠	15022510
RL51	1R8 OHM 5% 0,30W	⚠	15009780
RP01	5R1 OHM 10% 2,5W		10547070
RP02	18R0 OHM 230V PTC	⚠	10509980
RP15	10M0 OHM 5% 0,70W	⚠	10074320
RP20	1R0 OHM 5% 2,50W		10383240
RP56,58	41K2 OHM 1% 0,25W		50883790
RR04	8R2 OHM 5% 0,25W	⚠	15010150
RR72	200R0 OHM 1% 0,25W		80437540
RT55,58,65,68, 75,78	1K0 OHM 5% 0,30W	⚠	15009700
RT92	1K5 OHM 5% 0,50W		10121880

CL04	6N6F 1K6V		80304700
CL05	390N0F 10% 250V		43171400
CL10	680P0F 10% 3K0V		20248410
CL16,40,50	330P0F 10% 1K0V		14030320
CL20	22U0F 20% 250V	⚠	13071070
CL33	1N0F 20% 1K0V		20388780
CP01,02	100N0F 20% 275V	⚠	10331520
CP04	10N0F 20% 400V		14033040
CP05,06	4N7F 1K0V		10058740
CP08	100U0F 385V		30662900
CP09	1N5F 10% 1K0V		20338740
CP15	1N0F 20% 400V	⚠	20822690
CP82	680P0F 10% 1K0V		20505600
CP91	2N2F 10% 250V	⚠	20833060
CT90	2N2F 2K0V		14036020

LL01	DRIVER		20814520
LL03		⚠	80367500
LL05	DSTLH27	⚠	20835940
LP02		⚠	10395160
LP03	SMT17	⚠	10528770

R : RECYCLED PART
: PIECE RECYCLEE
: AUSTAUSCHTEILE
: RICAMBIO RICICLATO
: MODULO REPROCESADO

For any requests, please contact THOMSON multimedia after sales service area
Pour toutes précisions, contactez votre service apres vente local THOMSON multimedia
Für weitere Auskünfte, wenden Sie sich bitte an die THOMSON multimedia Kundendienste
Per precisazioni, contattare l'assistenza tecnica THOMSON multimedia
Para cualquier pregunta, por favor contactar con el responsable de zona del servicio postventa de THOMSON multimedia

06 / 98 35066010
REV. N° 0 00 / 00 00000000

No copying, translation, modification on other use authorized. All rights reserved worldwide. • Tous droits de reproduction, de traduction, d'adaptation et d'exécution réservés pour tous les pays. • Sämtliche Urheberrechte an diesen Texten und Zeichnungen stehen uns zu. Nachdrucke, Vervielfältigungen - auch auszugsweise - nur mit unserer vorherigen Zustimmung zulässig. Alle Rechte vorbehalten. • I diritti di riproduzione, di traduzione, e esecuzione sono riservati per tutti i paesi. • Derechos de reproduccion, de traduccion, de adapacion y de ejecucion reservados para todos los paises.

OTHER PARTS
AUTRES PIECES
SONSTIGE TEILE
ALTRE PARTI
OTRAS PIEZAS

BE01	SCART SOCKET PRISE PERITEL EURO-AV-BUCHSE EUROPRESA NORMALIZZATA EUROCONECTOR	10362830
BE02	HEADPHONE SOCKET PRISE CASQUE KOPFHOERERBUCHSE PRESA JACK TOMA JACK	20345310
BE03	CINCH SOCKET PRISE CINCH CINCH-BUCHSE PRESA CINCH TOMA CINCH	11007219
BE04	HEADPHONE SOCKET PRISE CASQUE KOPFHOERERBUCHSE PRESA JACK TOMA JACK	30909940
BT02	CATHODE RAY TUBE SOCKET ⚠ SUPPORT TUBE CATHODIQUE BILDROEHRENFASSUNG SUPPORTO TUBO CATODICO SOPORTE T.R.C	20631370
FP01	1A6T TIME-LAG FUSE ⚠ 1A6T FUSIBLE TEMPORISE 1A6T SICHERUNG 1A6T FUSIBILE TEMPORIZZATO 1A6T FUSIBLE TEMPORIZADO	48064700
NH01	CTT5045 UHF/VHF TUNER R CTT5045 TETE UHF/VHF CTT5045 UHF/VHF TUNER CTT5045 TUNER UHF/VHF CTT5045 SINTONIZADOR UHF/VHF	20765490
SK01,02,03,04	MICROSWITCH MICRO CONTACTEUR MIKROSCHALTER MICROINTERRUTTORE MICROCONTACTOR	30011100
SP05	ON/OFF SWITCH ⚠ CONTACTEUR MARCHE/ARRET EIN-AUS SCHALTER CONTATTORE ACCESO/SPENTO CONTACTOR MARCHA/PARADA	20612390

EQUIPMENT/PRESENTATION
EQUIPEMENT/PRESENTATION
AUSSTATTUNG/GEHAEUSE
PARTI VARIE
EQUIPO/PRESENTACION

FRONT PANEL FACADE FRONTPLATTE PANNELLO FRONTALE PANEL FRONTAL	25314870
LOGO FERGUSON LOGO FERGUSON SCHRIFTZUG FERGUSON MARCHIO FERGUSON LOGOTIPO FERGUSON	25295050
8R OHM 8W LOUDSPEAKER 50X90 8R OHM 8W HAUT PARLEUR 50X90 8R OHM 8W LAUTSPRECHER 50X90 8R OHM 8W ALTOPARLANTE 50X90 8R OHM 8W ALTAVOZ 50X90	10377680
REAR PANEL DOS RUECKWAND PANNELLO POSTERIORE TAPA POSTERIOR	⚠ 25310900
POWER SUPPLY LEAD (UK) CORDON D'ALIMENTATION (UK) NETZKABEL (UK) CAVO DI ALIMENTAZIONE (UK) CABLE DE ALIMENTACION (UK)	⚠ 20492600
ON/OFF BUTTON TOUCHE MARCHE/ARRET EIN-AUS TASTE TASTO ACCESSO/SPENTO TECLA MARCHA/PARADA	25314630
BUTTON STRIP BARRETTE DE TOUCHES TASTENLEISTE PIATTINA TASTI PLACA DE TECLAS	25317290
A48EAX13X01 CATHODE RAY A48EAX13X01 TUBE CATHODIQUE A48EAX13X01 FARBBILDROEHRE A48EAX13X01 TUBO CATODICO A48EAX13X01 T.R.C	⚠ 10543360
DEGAUSSING COIL BOBINE DE DEMAGNETISATION ENTMAGNETISIERUNGSSPULE BOBINA DI SMAGNETIZZAZIONE BOBINA DE DESIMANTACION	⚠ 47320196
F3092 REMOTE CONTROL F3092 TELECOMMANDE F3092 FERNBEDIENUNG F3092 TELECOMANDO F3092 TELEMANDO	20647490
FOLDING BOX EMBALLAGE CARTON KARTON IMBALLAGGIO CARTONE EMBALAJE CARTON	25329710
FITTING UPPER CALE SUPERIEURE POLSTER OBEN DISTANZIATORE SUPERIORE CALZO SUPERIOR	25312360
FITTING DOWNER CALE INFERIEURE POLSTER UNTEN DISTANZIATORE INFERIORE CALZO INFERIOR	25312390

INSTRUCTIONS
NOTICES
ANLEITUNGEN
ISTRUZIONI
MANUALE

M5115UT PARTS LIST M5115UT LISTE DE PIECES DETACHEES M5115UT ERSATZTEILLISTE M5115UT LISTA PARTI DI RICAMBIO M5115UT LISTA DE PIEZAS DE REPUESTO	35066010
TX807 SERVICE MANUEL EUROPE TX807 DOC TECHNIQUE EUROPE TX807 TECHNISCHE DOKUMENTATION EUROPE TX807 DOCUMENTAZIONE TECNICA EUROPE TX807 DOCUMENTACION TECNICA EUROPE	35058840
M5115UT UM FERGUSON GB M5115UT NU FERGUSON GB M5115UT BA FERGUSON GB M5115UT IU FERGUSON GB M5115UT IU FERGUSON GB	25335610

The description and characteristics given here are of informative significance only, and non committal. To keep up the high quality of our products, we reserve the right to make any changes or improvement without previous notice. • Les descriptions et caractéristiques figurant sur ce document sont données à titre d'information et non d'engagement. En effet, soucieux de la qualité de nos produits, nous nous réservons le droit d'effectuer, sans préavis, toute modification ou amélioration. • Die Beschreibungen und Daten in dieser Anleitung dienen nur zur Information und sind nicht bindend. Um die Qualität unserer Produkte ständig zu verbessern, behalten wir uns das Recht auf Änderungen vor. • Le descrizioni e le caratteristiche date su questo documento sono fornite a semplice titolo informativo e senza impegno. Ci riserviamo il diritto di eseguire, senza preavviso, qualsiasi modifica o miglioramento. • Las descripciones y características que figuran en este documento se dan a título de información y no de compromiso. En efecto, en bien de la calidad de nuestros productos, nos reservamos el derecho de efectuar, sin previo aviso, cualquier modificación o mejora.

THOMSON multimedia S.A au capital de 12375616000 FF - 46, Quai Alphonse Le Gallo 92648 Boulogne Cedex FRANCE - RCS NANTERRE B 333 773 174

THOMSON MULTIMEDIA — TV

Brandt FERGUSON SABA TELEFUNKEN THOMSON

PARTS LIST
LISTE PIECES DETACHEES
ERSATZTEILLISTE
LISTA PARTI DI RICAMBIO
LISTA DE PIEZAS DE REPUESTO

THOMSON
20DG15ES
Chassis TX807C

MODULES

MAIN	**T807CF96C002011**	**10674920**

GK001	TSOP1333		25358570
IB001	TDA6107Q/N2		10659660
IF001	TDA9302H		20819860
IP050	TLP621 GR(D4-LF2 T)	⚠	20827900
IP090	STV8130		10658850
IP095	MC7805/ACT		46007400
IR001	M22W04		10456150
IS001	TDA7253		20203120
IV001	TDA9351N1		10649480
TL035	S2055N		20578760
ZP092	MP315	⚠	10575090
ZP094	MP32	⚠	25405650

TI030	DTC144EK SMD	16007030
TL031,**TP**032, 053,054,061, 070,**TS**002,004, 050,051,**TV**020, 022	BC846B SMD	16006260
TL032,**TP**022	BC337-40	45001466
TL050,**TP**025, 026,031,060, 080,**TV**021	BC856B SMD	16006310
TL060	RN2417 SMD	25423180
TL061,062	RN1409 SMD	20688820
TP020	STP3NB90FP	25411640
TP058,072,081, **TR**002	BCR141 SMD	16006890
TP071,**TR**001	BCR185 SMD	16006900

DB030,031,050, 051,070,071, **DJ**020,**DP**031, 032	BAV21	44044407
DF002,**DL**004, 005,015,030, 060,**DP**022,033, 034,035,037, 040,057,058, 070,081,**DV**070, 071	1N4148	44009209
DF010,**DL**011, 013,035,**DP**095	1N4001	16008160
DH001	BZX55C30	80444170
DI030	BA782S	20542050
DL010,012,025, 040,**DP**026	RGP10G	10459090
DL014	BZX55B9V1	70438220
DP001,002,003, 004	BYW27-1000	10455390
DP021,043	BZX55B16	11073430
DP023	BZX55C7V5	80444150
DP027	BZX55C27	60447870
DP030	BZX55C11	11073670
DP080	FUF4005/MUR160	16009580
DP090,092	MUR120	10564670
DR001	BZX55B5V1/ZPD5V1 2%	44035702
GE001	LTL307/EE LED	16010330

FI010	OFWK6270K FOS	10503340
FI030	40M4HZ	10664720
FI050	5M5HZ	10658370
QV001	12M0HZ	25418130

PP051	470R0 OHM	10260350

RB001	1K5 OHM 5% 0,50W		10121880
RB013	10R0 OHM 10% 0,50W		15000160
RB031,051,071	560R0 OHM 10% 0,50W		10257590
RF004,006	1K5 OHM 1% 0,25W		80437630
RF007	1R5 OHM 1% 0,70W		10451140
RF008	2R2 OHM 5% 0,25W	⚠	15009870
RF010	1R5 OHM 5% 0,25W	⚠	13063950
RL010	0R1 OHM 10% 0,40W	⚠	15022510
RL012	0R22 OHM 5% 0,50W	⚠	10305450
RL040	47R0 OHM 5% 0,35W	⚠	20923340
RL090	86K6 OHM 1% 0,25W		15021680
RP002	18R0 OHM 230V PTC	⚠	10509980
RP008	5R1 OHM 10% 2,50W		10472390
RP020	1R0 OHM 5% 2,50W		10383240
RP050	10M0 OHM 5% 0,70W	⚠	10074320
RP054	68K1 OHM 1% 0,70W		10147740
RS028	18R0 OHM 5% 0,30W	⚠	15009660
RS040	4R7 OHM 5% 0,35W	⚠	10226310
RS056	0R47 OHM 10% 0,40W	⚠	15022650

CB001	10N0F 3K0V		14036450
CB004	47N0F 5% 250V		40433080
CL003	10N0F 5% 400V		10588870
CL010,012,040, **CP**089,093	330P0F 20% 1K0V		14035270
CL024	440N0F 5% 250V		43352100
CP001	100N0F 20% 275V	⚠	10331520
CP003	68N0F 20% 250V		10256210
CP004	1N5F 10% 1K0V		20338740
CP005,006	4N7F 1K0V		10058740
CP009	3N3F 20% 1K6V		10607950
CP050	2N2F 20% 400V	⚠	10344870
CP082	1N0F 10% 500V		10546570

LL005	DSTLH27F	⚠	10658470
LL032	DRIVER		20936440
LP002		⚠	10654720
LP003	SMT17	⚠	10674880

R : RECYCLED PART
: PIECE RECYCLEE
: AUSTAUSCHTEILE
: RICAMBIO RICICLATO
: MODULO REPROCESADO

For any requests, please contact THOMSON multimedia after sales service area
Pour toutes précisions, contactez votre service apres vente local THOMSON multimedia
Für weitere Auskünfte, wenden Sie sich bitte an die THOMSON multimedia Kundendienste
Per precisazioni, contattare l'assistenza tecnica THOMSON multimedia
Para cualquier pregunta, por favor contactar con el responsable de zona del servicio postventa de THOMSON multimedia

07 / 2000 35125520
REV. N° 0 00 / 00 00000000

No copying, translation, modification on other use authorized. All rights reserved worldwide. • Tous droits de reproduction, de traduction, d'adaptation et d'exécution réservés pour tous les pays. • Sämtliche Urheberrechte an diesen Texten und Zeichnungen stehen uns zu. Nachdrucke, Vervielfältigungen - auch auszugsweise - nur mit unserer vorherigen Zustimmung zulässig. Alle Rechte vorbehalten. • I diritti di riproduzione, di traduzione, e esecuzione sono riservati per tutti i paesi. • Derechos de reproduccion, de traduccion, de adaptacion y de ejecucion reservados para todos los paises.

OTHER PARTS
AUTRES PIECES
SONSTIGE TEILE
ALTRE PARTI
OTRAS PIEZAS

BB005	CATHODE RAY TUBE SOCKET ⚠ SUPPORT TUBE CATHODIQUE BILDROEHRENFASSUNG SUPPORTO TUBO CATODICO SOPORTE T.R.C	80298800
BJ005	CINCH SOCKET PRISE CINCH CINCH-BUCHSE PRESA CINCH TOMA CINCH	11007219
BJ006	CINCH SOCKET PRISE CINCH CINCH-BUCHSE PRESA CINCH TOMA CINCH	30909940
BQ012	HEADPHONE SOCKET PRISE CASQUE KOPFHOERERBUCHSE PRESA JACK TOMA JACK	20345310
BV001	SCART SOCKET PRISE PERITEL EURO-AV-BUCHSE EUROPRESA NORMALIZZATA EUROCONECTOR	10362830
FP001	1A6T TIME-LAG FUSE ⚠ 1A6T FUSIBLE TEMPORISE 1A6T SICHERUNG 1A6T FUSIBILE TEMPORIZZATO 1A6T FUSIBLE TEMPORIZADO	48064700
NH001	CTT5010 UHF/VHF TUNER CTT5010 TETE UHF/VHF CTT5010 UHF/VHF TUNER CTT5010 TUNER UHF/VHF CTT5010 SINTONIZADOR UHF/VHF	20812280
SK001,002,003, 004	MICROSWITCH MICRO CONTACTEUR MIKROSCHALTER MICROINTERRUTTORE MICROCONTACTOR	30011100
SP005	ON/OFF SWITCH ⚠ CONTACTEUR MARCHE/ARRET EIN-AUS SCHALTER CONTATTORE ACCESO/SPENTO CONTACTOR MAECHA/PARADA	25442860

EQUIPMENT/PRESENTATION
EQUIPEMENT/PRESENTATION
AUSSTATTUNG/GEHAEUSE
PARTI VARIE
EQUIPO/PRESENTACION

FRONT PANEL AND BUTTON GY25TH FACADE ET TOUCHES GY25TH FRONTPLATTE UND TASTE GY25TH PANNELLO FRONTALE E TASTO GY25TH PANEL FRONTAL Y TECLA GY25TH	25459230
REAR PANEL GY26TH ⚠ DOS GY26TH RUECKWAND GY26TH PANNELLO POSTERIORE GY26TH TAPA POSTERIOR GY26TH	25459240
INFRARED WINDOW GLACE INFRAROUGE INFRAROTOT FENSTER VETRO INFRAROSSO CRISTAL INFRARROJO	25403400
LOGO THOMSON LOGO THOMSON SCHRIFZUG THOMSON MARCHIO THOMSON LOGOTIPO THOMSON	25381430
16R OHM 10W LOUDSPEAKER 50X90 16R OHM 10W HAUT PARLEUR 50X90 16R OHM 10W LAUSPRECHER 50X90 16R OHM 10W ALTOPARLANTE 50X90 16R OHM 10W ALTAVOZ 50X90	10316960
ON/OFF BUTTON GY25TH TOUCHE MARCHE/ARRET GY25TH EIN-AUS TASTE GY25TH TASTO ACCESO/SPENTO GY25TH TECLA MARCHA/PARADA GY25TH	25459250
POWER SUPPLY LEAD ⚠ CORDON D'ALIMENTATION NETZKABEL CAVO DI ALIMENTAZIONE CABLE DE ALIMENTACION	10260830
A48EAX13X01 CATHODE RAY TUBE ⚠ A48EAX13X01 TUBE CATHODIQUE A48EAX13X01 FARBBILDROEHRE A48EAX13X01 TUBO CATODICO A48EAX13X01 T.R.C	10543360
DEGAUSSING COIL ⚠ BOBINE DE DEMAGNETISATION ENTMAGNETISIERUNGSSPULE BOBINA DI SMAGNETIZZAZIONE BOBINA DE DESIMANTACION	47320196
RCT100 REMOTE CONTROL RCT100 TELECOMMANDE RCT100 FERNBEDIENUNG RCT100 TELECOMANDO RCT100 TELEMANDO	10546340
FOLDING BOX EMBALLAGE CARTON KARTON IMBALLAGGIO CARTONE EMBALAJE CARTON	25380830
FITTING UPPER CALE SUPERIEURE POLSTER OBEN DISTANZIATORE SUPERIORE CALZO SUPERIOR	25403380
FITTING DOWNER CALE INFERIORE POLSTER UNTEN DISTANZIATORE INFERIORE CAZO INFERIOR	25403370

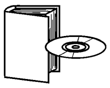

20DG15ES PARTS LIST 20DG15ES LISTE DE PIECES DETACHEES 20DG15ES ERSATZTEILLISTE 20DG15ES LISTA PARTI DI RICAMBIO 20DG15ES LISTA DE PIEZAS DE REPUESTO	35125520
TX807C/CS SERVICE MANUAL TX807C/CS DOC TECHNIQUE TX807C/CS TECHNISCHE DOKUMENTATION TX807C/CS DOCUMENTAZIONE TECNICA TX807C/CS DOCUMENTACION TECNICA	35110300
CDROM TX807 VERSION 2 CDROM TX807 VERSION 2 CDROM TX807 VERSION 2 CDROM TX807 VERSION 2 CDROM TX807 VERSION 2	35110290
TX807C/CS UM D/F/I/GB/GR/DK/NL/S/E/P TX807C/CS NU D/F/I/GB/GR/DK/NL/S/E/P TX807C/CS BA D/F/I/GB/GR/DK/NL/S/E/P TX807C/CS IU D/F/I/GB/GR/DK/NL/S/E/P TX807C/CS IU D/F/I/GB/GR/DK/NL/S/E/P	50011430

The description and characteristics given here are of informative significance only, and non committal. To keep up the high quality of our products, we reserve the right to make any changes or improvement without previous notice. • Les descriptions et caractéristiques figurant sur ce document sont données à titre d'information et non d'engagement. En effet, soucieux de la qualité de nos produits, nous nous réservons le droit d'effectuer, sans préavis, toute modification ou amélioration. • Die Beschreibungen und Daten in dieser Anleitung dienen nur zur Information und sind nicht bindend. Um die Qualität unserer Produkte ständig zu verbessern, behalten wir uns das Recht auf Änderungen vor. • Le descrizioni e le caratteristiche date su questo documento sono fornite a semplice titolo informativo e senza impegno. Ci riserviamo il diritto di eseguire, senza preavviso, qualsiasi modifica o miglioramento. • Las descripciones y características que figuran en este documento se dan a título de información y no de compromiso. En efecto, en bien de la calidad de nuestros productos, nos reservamos el derecho de efectuar, sin previo aviso, cualquier modificación o mejora.

THOMSON multimedia S.A au capital de 932 655 840 € - 46, Quai Alphonse Le Gallo 92648 Boulogne Cedex FRANCE - RCS NANTERRE B 333 773 174

THOMSON MULTIMEDIA

TV

Brandt FERGUSON SABA TELEFUNKEN THOMSON

PARTS LIST
LISTE PIECES DETACHEES
ERSATZTEILLISTE
LISTA PARTI DI RICAMBIO
LISTA DE PIEZAS DE REPUESTO

THOMSON
14MG15ET
Chassis TX807C

MODULES

MAIN	**T807CF911002010**	**10675370**

GK001	TSOP1333	25358570
IB001	TDA6107Q/N2	10659660
IF001	TDA9302H	20819860
IP050	TLP621 GR(D4-LF2 T)	⚠ 20827900
IP090	STV8130	10658850
IP095	MC7805/ACT	46007400
IR001	M22W04	10456150
IS001	TDA7253	20203120
IV001	TDA9351N1	10649480
TL035	S2055N	20578760
ZP094	MP32	⚠ 25405650

TI030	DTC144EK SMD	16007030
TL031,**TP**032, 053,054,061, 070,**TS**002,004, 050,051,**TV**020, 022	BC846B SMD	16006260
TL032,**TP**022	BC337-40	45001466
TL050,**TP**025, 026,031,060, 080,**TV**021	BC856B SMD	16006310
TL060	RN2417 SMD	25423180
TL061,062	RN1409 SMD	20688820
TP020	STP3NB90FP	25411640
TP058,072,081, **TR**002	BCR141 SMD	16006890
TP071,**TR**001	BCR185 SMD	16006900

DB004	1N4004	44009009
DB030,031,050, 051,070,071, **DJ**020,**DP**031, 032	BAV21	44044407
DF002,**DL**004, 005,015,030, 060,**DP**022,033, 034,035,037, 040,057,058, 070,081,**DV**070, 071	1N4148	44009209
DF010,**DL**011, 013,035,**DP**095	1N4001	16008160
DH001	BZX55C30	80444170
DI030	BA782S	20542050
DL010,012,025, 040,**DP**026,090	RGP10G	10459090
DL014	BZX55B9V1	70438220
DP001,002,003, 004	BYW27-1000	10455390
DP021,043	BZX55B16	11073430
DP023	BZX55C7V5	80444150
DP027	BZX55C27	60447870
DP030	BZX55C11	11073670
DP080	FUF4005/MUR160	16009580
DP092	MUR120	10564670
DR001	BZX55B5V1/ZPD5V1 2%	44035702
GE001	LTL307/EE LED	16010330

FI010	OFWK6270K FOS	10503340
FI030	40M4HZ	10664720
FI050	5M5HZ	10658370
QV001	12M0HZ	25418130

PP051	470R0 OHM	10260350

RB001,004	1K5 OHM 5% 0,50W	10121880
RB013	10R0 OHM 10% 0,50W	15000160
RB031,051,071	560R0 OHM 10% 0,50W	10257590
RB033,052,073, **RL**033,**RV**005, 006,010,011, 012,014,019	100R0 OHM 5% 0,25W	30943330
RF004,006	1K5 OHM 1% 0,25W	80437630
RF007	1R82 OHM 1% 0,70W	10451420
RF008	2R2 OHM 5% 0,25W	⚠ 15009870
RF010	1R5 OHM 5% 0,25W	⚠ 13063950
RL010	0R1 OHM 10% 0,40W	⚠ 15022510
RL012	0R22 OHM 5% 0,50W	⚠ 10305450
RL040	47R0 OHM 5% 0,35W	⚠ 20923340
RP002	18R0 OHM 220V PTC	⚠ 41398800
RP008	5R1 OHM 10% 2,50W	10472390
RP020	1R0 OHM 5% 2,50W	10383240
RP050	10M0 OHM 5% 0,70W	⚠ 10074320
RP054	68K1 OHM 1% 0,70W	10147740
RS028	18R0 OHM 5% 0,30W	⚠ 15009660
RS040	4R7 OHM 5% 0,35W	⚠ 10226310
RS056	0R47 OHM 10% 0,40W	⚠ 15022650

CB001	10N0F 3K0V	14036450
CL003	10N0F 5% 400V	10588870
CL010,012,040, **CP**089,093	330P0F 20% 1K0V	14035270
CL021	6N6F 1K6V	80304700
CL022	470P0F 10% 2K0V	25392030
CL024	440N0F 5% 250V	43352100
CP001	100N0F 20% 275V	⚠ 40404090
CP003	68N0F 20% 250V	10256210
CP004	1N5F 10% 1K0V	20338740
CP005,006	4N7F 1K0V	10058740
CP008	68U0F 20% 400V	25414980
CP009	3N3F 20% 1K6V	10607950
CP050	2N2F 20% 400V	⚠ 10344870
CP082	1N0F 10% 500V	10546570

R : RECYCLED PART
: PIECE RECYCLEE
: AUSTAUSCHTEILE
: RICAMBIO RICICLATO
: MODULO REPROCESADO

For any requests, please contact THOMSON multimedia after sales service area
Pour toutes précisions, contactez votre service apres vente local THOMSON multimedia
Für weitere Auskünfte, wenden Sie sich bitte an die THOMSON multimedia Kundendienste
Per precisazioni, contattare l'assistenza tecnica THOMSON multimedia
Para cualquier pregunta, por favor contactar con el responsable de zona del servicio postventa de THOMSON multimedia

07 / 2000 35125300
REV. N° 0 00 / 00 00000000

No copying, translation, modification on other use authorized. All rights reserved worldwide. • Tous droits de reproduction, de traduction, d'adaptation et d'exécution réservés pour tous les pays. • Sämtliche Urheberrechte an diesen Texten und Zeichnungen stehen uns zu. Nachdrucke, Vervielfältigungen - auch auszugsweise - nur mit unserer vorherigen Zustimmung zulässig. Alle Rechte vorbehalten. • I diritti di riproduzione, di traduzione, e esecuzione sono riservati per tutti i paesi. • Derechos de reproduccion, de traduccion, de adaptacion y de ejecucion reservados para todos los paises.

LL005	DSTLH27F	⚠	10658340
LL032	DRIVER		20936440
LP002		⚠	10654720
LP003	SMT17	⚠	10674870

OTHER PARTS
AUTRES PIECES
SONSTIGE TEILE
ALTRE PARTI
OTRAS PIEZAS

BB006	CATHODE RAY TUBE SOCKET SUPPORT TUBE CATHODIQUE BILDROEHRENFASSUNG SUPPORTO CATODICO SOPORTE T.R.C	⚠	10653850
BQ012	HEADPHONE SOCKET PRISE CASQUE KOPFHOERERBUCHSE PRESA JACK TOMA JACK		20345310
BV001	SCART SOCKET PRISE PERITEL EURO-AV-BUCHSE EUROPRESA NORMALIZZATA EUROCONECTOR		10362830
FP001	1A6T TIME-LAG FUSE 1A6T FUSIBLE TEMPORISE 1A6T SICHERUNG 1A6T FUSIBILE TEMPORIZZATO 1A6T FUSIBLE TEMPORIZADO	⚠	48064700
IR001	IC SUPPORT 2X4 SUPPORT CI 2X4 IC-FASSUNG 2X4 SUPPORTO CI 2X4 SOPORTE CI 2X4		67449100
NH001	CTT5010 UHF/VHF TUNER CTT5010 TETE UHF/VHF CTT5010 UHF/VHF TUNER CTT5010 TUNER UHF/VHF CTT5010 SINTONIZADOR UHF/VHF		20812280
SK001,002,003, 004	MICROSWITCH MICRO CONTACTEUR MIKROSCHALTER MICROINTERRUTTORE MICROCONTACTOR		30011100
SP005	ON/OFF SWITCH CONTACTEUR MARCHE/ARRET EIN-AUS SCHALTER CONTATTORE ACCESO/SPENTO CONTACTOR MAECHA/PARADA	⚠	25442860

EQUIPMENT/PRESENTATION
EQUIPEMENT/PRESENTATION
AUSSTATTUNG/GEHAEUSE
PARTI VARIE
EQUIPO/PRESENTACION

A34AGT13X38 CATHODE RAY TUBE A34AGT13X38 TUBE CATHODIQUE A34AGT13X38 FARBBILDROEHRE A34AGT13X38 TUBO CATODICO A34AGT13X38 T.R.C	⚠	20786290
DEGAUSSSING COIL BOBINE DE DEMAGNETISATION ENTMAGNETISIERUNGSSPULE BOBINA DI SMAGNETIZZAZIONE BOBINA DE DESIMANTACION	⚠	20613360
POWER SUPPLY LEAD CORDON D'ALIMENTATION NETZKABEL CAVO DI ALIMENTAZIONE CABLE DE ALIMENTACION	⚠	10260830
8R OHM 3W LOUDSPEAKER 40X70 8R OHM 3W HAUT PARLEUR 40X70 8R OHM 3W LAUTSPRECHER 40X70 8R OHM 3W ALTOPARLANTE 40X70 8R OHM OHM 3W ALTAVOZ 40X70		20901550
RCT100 REMOTE CONTROL RCT100 TELECOMMANDE RCT100 FERNBEDIENUNG RCT100 TELECOMANDO RCT100 TELEMANDO		10546340
TELESCOPIC ANTENNA ANTENNE TELESCOPIQUE TELESKOPANTENNE ANTENNA TELESCOPICA ANTENA TELESCOPICA		5087882A
FRONT PANEL GY20TH FACADE GY20TH FRONTPLATTE GY20TH PANNELLO FRONTALE GY20TH PANEL FRONTAL GY20TH		25412830
REAR PANEL GY20TH DOS GY20TH RUECKWAND GY20TH PANNELLO POSTERIORE GY20TH TAPA POSTERIOR GY20TH	⚠	25416570
LED WINDOW GLACE LED LED FENSTER VETRO LED CRISTAL LED		25316500
INFRARED WINDOW GLACE INFRAROUGE INFRAROT FENSTER VETRO INFRAROSSO CRISTAL INFRARROJO		25316490
LOGO THOMSON LOGO THOMSON SCHRIFTZUG THOMSON MARCHIO THOMSON LOGOTIPO THOMSON		25332060
ON/OFF BUTTON GY20TH TOUCHE MARCHE/ARRET GY20TH EIN-AUS TASTE GY20TH TASTO ACCESO/SPENTO GY20TH TECLA MARCHA/PARADA GY20TH		25454880
BUTTON ASSY GY20TH ENSEMBLE DE TOUCHES GY20TH TASTENEINHEIT GY20TH ASSIEME TASTI GY20TH CONJUNTO DE TECLAS GY20TH		25318340
FOLDING BOX EMBALLAGE CARTON KARTON IMBALLAGGIO CARTONE EMBALAJE CARTON		25317390
FITTING UPPER CALE SUPERIEURE POLSTER OBEN DISTANZIATORE SUPERIORE CALZO SUPERIOR		25317410
FITTING DOWNER CALE INFERIEURE POLSTER UNTEN DISTANZIATORE INFERIORE CALZO INFERIOR		25317400

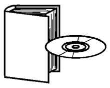

14MG15ET PARTS LIST 14MG15ET LISTE DE PIECES DETACHEES 14MG15ET ERSATZTEILLISTE 14MG15ET LISTA PARTI DI RICAMBIO 14MG15ET LISTA DE PIEZAS DE REPUESTO	35125300
TX807C/CS SERVICE MANUAL TX807C/CS DOC TECHNIQUE TX807C/CS TECHNISCHE DOKUMENTATION TX807C/CS DOCUMENTAZIONE TECNICA TX807C/CS DOCUMENTACION TECNICA	35110300
CDROM TX807 VERSION 2 CDROM TX807 VERSION 2 CDROM TX807 VERSION 2 CDROM TX807 VERSION 2 CDROM TX807 VERSION 2	35110290
TX807C/CS UM D/F/I/GB/GR/DK/NL/S/ E/P/CZ/H/PL/RU/SK TX807C/CS NU D/F/I/GB/GR/DK/NL/S/ E/P/CZ/H/PL/RU/SK TX807C/CS BA D/F/I/GB/GR/DK/NL/S/ E/P/CZ/H/PL/RU/SK TX807C/CS IU D/F/I/GB/GR/DK/NL/S/ E/P/CZ/H/PL/RU/SK TX807C/CS IU D/F/I/GB/GR/DK/NL/S/ E/P/CZ/H/PL/RU/SK	50007930

The description and characteristics given here are of informative significance only, and non committal. To keep up the high quality of our products, we reserve the right to make any changes or improvement without previous notice. • Les descriptions et caractéristiques figurant sur ce document sont données à titre d'information et non d'engagement. En effet, soucieux de la qualité de nos produits, nous nous réservons le droit d'effectuer, sans préavis, toute modification ou amélioration. • Die Beschreibungen und Daten in dieser Anleitung dienen nur zur Information und sind nicht bindend. Um die Qualität unserer Produkte ständig zu verbessern, behalten wir uns das Recht auf Änderungen vor. • Le descrizioni e le caratteristiche date su questo documento sono fornite a semplice titolo informativo e senza impegno. Ci riserviamo il diritto di eseguire, senza preavviso, qualsiasi modifica o miglioramento. • Las descripciones y características que figuran en este documento se dan a título de información y no de compromiso. En efecto, en bien de la calidad de nuestros productos, nos reservamos el derecho de efectuar, sin previo aviso, cualquier modificación o mejora.

THOMSON multimedia S.A au capital de 932 655 840 € - 46, Quai Alphonse Le Gallo 92648 Boulogne Cedex FRANCE - RCS NANTERRE B 333 773 174

THOMSON MULTIMEDIA

TV

Brandt FERGUSON SABA TELEFUNKEN THOMSON

PARTS LIST
LISTE PIECES DETACHEES
ERSATZTEILLISTE
LISTA PARTI DI RICAMBIO
LISTA DE PIEZAS DE REPUESTO

FERGUSON
T7017U
Chassis TX807CS

MODULES

MAIN	**T807CF5C3022043**	**10684610**
EWM	**EWM80050**	**10679310**
VSM	**SUB VSM80000**	**10705270**

GK101	TSOP1333	25358570
IB001	TDA6107Q/N2	10659660
IF001	TDA8177	15053440
IL101	LM324AN	20679790
IP050	TLP621 GR(D4-LF2 T)	⚠ 20827900
IP090	STV8130	10658850
IP095	MC7805/ACT	46007400
IR001	M22W04	10456150
IS001	TDA7263	10281150
IS100	MSP3415D-PO	10648130
IV001	TDA9554PS/N1/1/0274	10649490
ZP092	MP315	⚠ 10575090
ZP094	MP32	⚠ 25405650

TI030,045	DTC144EK SMD	16007030
TL031,**TP**032, 053,054,061, 070,**TS**050,100, 130,**TV**020,022	BC846B SMD	16006260
TL032,**TP**022	BC337-40	45001466
TL035	S2055N	20578760
TL050,**TP**025, 026,031,060, 080,**TV**021	BC856B SMD	16006310
TL060	RN2417 SMD	25423180
TL061,062	RN1409 SMD	20688820
TL101	IRF630FP	25453960
TP020	STP6NB90FP	25460310
TP058,072,081, **TR**002	BCR141 SMD	16006890
TP071,**TR**001	BCR185 SMD	16006900

DB004	1N4004	44009009
DB030,031,050, 051,070,071, **DJ**120,**DL**101, **DP**031,032	BAV21	44044407
DF002,003,101, 102,**DH**004, **DL**004,015,030, 060,103,116, 117,**DP**022,033, 034,035,037, 040,057,058, 070,081,**DV**070, 071,072	1N4148	44009209
DF010,**DL**011, 013,035,**DP**095	1N4001	16008160
DH001	BZX55C30	80444170
DI030,040	BA782S	20542050
DL010,012,025, 040,**DP**026,090	RGP10G	10459090
DL014	BZX55B15/ZPD15 2%	80444020
DL021	BY228	16008370
DL104,**DR**001	BZX55B5V1/ZPD5V1 2%	44035702
DL121,122	RGP15G	10272800
DL138	BAT42	16007410
DP001,002,003, 004	BYW27-1000	10455390
DP021	BZX55B16	11073430
DP023	BZX55C7V5	80444150
DP027	BZX55B30	20475340
DP030	BZX55C11	11073670
DP080	MUR460	16009650
DP092	EGP10D	20953640
GE101	LTL307/EE LED	16010330

FI010	OFWK6257K FOS	10545030
FI020	OFWK9650M FOS	10545440
FI030	40M4HZ	10664720
FI050	5M74HZ	20338170
QS100	18M432HZ	10334670
QV001	12M0HZ	25418130

LL122		10636390

PL140,143	4K7 OHM	10082930
PL141	470R0 OHM	10260250
PP051	470R0 OHM	10260350

RB001,004, **RL**026	1K5 OHM 5% 0,50W	10121880
RB013	10R0 OHM 10% 0,50W	15000160
RB031,051,071	560R0 OHM 10% 0,50W	10257590
RF004,006, **RK**103	1K5 OHM 1% 0,25W	80437630
RF007	1R21 OHM 1% 0,70W	13010820
RF008	2R2 OHM 5% 0,25W	⚠ 15009870
RK101	453R0 OHM 1% 0,250W	15018140
RK102	681R0 OHM 1% 0,25W	15020310
RK104	3K32 OHM 1% 0,25W	15017270
RL010	0R1 OHM 10% 0,40W	⚠ 15022510
RL012	0R22 OHM 5% 0,50W	⚠ 10305450
RL040	47R0 OHM 5% 0,35W	⚠ 20923340
RL090	127K0 OHM 1% 0,40W	41310702
RP002	18R0 OHM 220V PTC	⚠ 41398800
RP008	4R7 OHM 5% 3W	25477780
RP020	0R68 OHM 5% 2,5W	20822410
RP050	10M0 OHM 5% 0,70W	⚠ 10074320
RS039,040,140	4R7 OHM 5% 0,35W	⚠ 10226310
RS056	0R47 OHM 10% 0,40W	⚠ 15022650
RS160	3R9 OHM 5% 0,25W	⚠ 15009970

R : RECYCLED PART
: PIECE RECYCLEE
: AUSTAUSCHTEILE
: RICAMBIO RICICLATO
: MODULO REPROCESADO

For any requests, please contact THOMSON multimedia after sales service area
Pour toutes précisions, contactez votre service apres vente local THOMSON multimedia
Für weitere Auskünfte, wenden Sie sich bitte an die THOMSON multimedia Kundendienste
Per precisazioni, contattare l'assistenza tecnica THOMSON multimedia
Para cualquier pregunta, por favor contactar con el responsable de zona del servicio postventa de THOMSON multimedia

03 / 2001 **35151780**
REV. N° 0 00 / 00 **00000000**

No copying, translation, modification on other use authorized. All rights reserved worldwide. • Tous droits de reproduction, de traduction, d'adaptation et d'exécution réservés pour tous les pays. • Sämtliche Urheberrechte an diesen Texten und Zeichnungen stehen uns zu. Nachdrucke, Vervielfältigungen - auch auszugsweise - nur mit unserer vorherigen Zustimmung zulässig. Alle Rechte vorbehalten. • I diritti di riproduzione, di traduzione, e esecuzione sono riservati per tutti i paesi. • Derechos de reproduccion, de traduccion, de adaptacion y de ejecucion reservados para todos los paises.

CB001	10N0F 3K0V	14036450
CB004	47N0F 5% 250V	40433080
CL003	22N0F 5% 400V	10535740
CL010,012,026, 040,**CP**089,093	330P0F 20% 1K0V	14035270
CL021	14N4F 3,5% 1K6V	10042750
CL024	440N0F 5% 250V	43352100
CL122	27N0F 5% 400V	10263540
CL123	2U7F 10% 100V	10161170
CL144	100P0F 20% 1K0V	14035280
CP001	100N0F 20% 275V	⚠ 10331520
CP003	68N0F 20% 250V	10256210
CP004	1N5F 10% 1K0V	20338740
CP005,006	4N7F 1K0V	10058740
CP008	150U0F 20% 400V	13050060
CP009	3N3F 20% 1K6V	10607950
CP050	2N2F 20% 400V	⚠ 10344870
CP082	1N0F 10% 500V	10546570

LL005	DSTMH30	⚠ 10691490
LL026	23U0H 15%	⚠ 10678590
LL032	DRIVER	20936440
LP002	25M0H	⚠ 10688710
LP003	SMT	⚠ 10693580

OTHER PARTS
AUTRES PIECES
SONSTIGE TEILE
ALTRE PARTI
OTRAS PIEZAS

BB005	CATHODE RAY TUBE SOCKET SUPPORT TUBE CATHODIQUE BILDROEHRENFASSUNG SUPPORTO TUBO CATODICO SOPORTE T.R.C	⚠ 80298800
BJ110	CINCH SOCKET PRISE CINCH CINCH-BUCHSE PRESA CINCH TOMA CINCH	10037440
BQ112	HEADPHONE SOCKET PRISE CASQUE KOPFHOERERBUCHSE PRESA JACK TOMA JACK	20345310
BV001	SCART SOCKET PRISE PERITEL EURO-AV-BUCHSE EUROPRESA NORMALIZZATA EUROCONECTOR	10362830
CH200	ON/OFF SWITCH MSB2000 CONTACTEUR MARCHE/ARRET MSB2000 EIN-AUS SCHALTER MSB2000 CONTATTORE ACCESO/ SPENTO MSB2000 CONTACTOR MARCHA/PARADA MSB2000	⚠ 10276500
CJ100	THT CABLE 600MM CABLE THT 600MM KABEL THT 600MM CAVO THT 600MM CABLE THT 600MM	⚠ 10562580
CJ105	CABLE 460MM 20KV HT STRIPPED CABLE 460MM 20KV HT STRIPPED KABEL 460MM 20KV HT STRIPPED CAVO 460MM 20KV HT STRIPPED CABLE 460MM 20KV HT STRIPPED	⚠ 10369650
FP001	1A6T 250V TIME-LAG FUSE 1A6T 250V FUSIBLE TEMPORISE 1A6T 250V SICHERUNG 1A6T 250V FUSIBILE TEMPORIZZATO 1A6T 250V FUSIBLE TEMPORIZADO	⚠ 48064700
NH001	CTT5010 UHF/VHF TUNER CTT5010 TETE UHF/VHF CTT5010 UHF/VHF TUNER CTT5010 TUNER UHF/VHF CTT5010 SINTONIZADOR UHF/VHF	20812280
SK101,102,103, 104	MICROSWITCH MICRO CONTACTEUR MIKROSCHALTER MICROINTERRUTTORE MICROCONTACTOR	30011100

EQUIPMENT/PRESENTATION
EQUIPEMENT/PRESENTATION
AUSSTATTUNG/GEHAEUSE
PARTI VARIE
EQUIPO/PRESENTACION

FRONT PANEL FACADE FRONTPLATTE PANNELLO FRONTALE PANEL FRONTAL	25371140
REAR PANEL GY20TH DOS GY20TH RUECKWAND GY20TH PANNELLO POSTERIORE GY20TH TAPA POSTERIOR GY20TH	⚠ 25450010
INFRARED WINDOW GLACE INFRAROUGE INFRAROTFENSTER VETRO INFRAROSSO CRISTAL INFRARROJO	25361990
LOGO FERGUSON LOGO FERGUSON SCHRIFTZUG FERGUSON MARCHIO FERGUSON LOGOTIPO FERGUSON	25295050
CHASSIS SUPPORT SUPPORT CHASSIS CHASSIS HALTER SUPPORTO CHASSIS SOPORTE CHASSIS	25382530
8R OHM 15W LOUDSPEAKER 60X125 8R OHM 15W HAUT PARLEUR 60X125 8R OHM 15W LAUTSPRECHER 60X125 8R OHM 15W ALTOPARLANTE 60X125 8R OHM 15W ALTAVOZ 60X125	10467060
ON/OFF BUTTON TOUCHE MARCHE/ARRET EIN-AUS TASTE TASTO ACCESO/SPENTO TECLA MARCHA/PARADA	25309090
BUTTON ASSY ENSEMBLE DE TOUCHES TASTENEINHEIT ASSIEME TASTI CONJUNTO DE TECLAS	25312630
POWER SUPPLY LEAD CORDON D'ALIMENTZATION NETZKABEL CAVO DI ALIMENTAZIONE CABLE DE ALIMENTACION	⚠ 25420360
CORD STOPPER ATTACHE CORDON SECTEUR ZUGENTLASTUNG BRIDA CORDONE DI ALIMENTAZIONE SUJECION CABLE DE ALIMENTACION	25071420
A66EHJ13X15 CATHODE RAY TUBE A66EHJ13X15 TUBE CATHODIQUE A66EHJ13X15 FARBBILDROEHRE A66EHJ13X15 TUBO CATODICO A66EHJ13X15 T.R.C	⚠ 10715790
DEGAUSSING COIL BOBINE DE DEMAGNETISATION ENTMAGNETISIERUNGSSPULE BOBINA DI SMAGNETTIZZAZIONE BOBINA DE DESIMANTACION	⚠ 47320183
RCTMB100 REMOTE CONTROL RCTMB100 TELECOMMANDE RCTMB100 FERNBEDIENUNG RCTMB100 TELECOMANDO RCTMB100 TELEMANDO	20879230
FOLDING BOX EMBALLAGE CARTON KARTON IMBALLAGGIO CARTONE EMBALAJE CARTON	25354290
FITTING DOWNER CALE INFERIEURE POLSTER UNTEN DISTANZIATORE INFERIORE CALZO INFERIOR	25325150
FITTING UPPER CALE SUPERIEURE POLSTER OBEN DISTANZIATORE SUPERIORE CALZO SUPERIOR	25325170

MAINTENANCE TOOLS
MAINTENANCE
WERKZEUG FUER DAS GERAET
UTENSILI DI MANUTENZIONE
MANTENIMIENTO

TX807C/CS 110D POWER SUPPLY REPAIR KIT TX807C/CS 110D KIT DE MAINTENANCE ALIMENTATION TX807C/CS 110D REPARATURSET NETZTEIL TX807C/CS 110D KIT PER RIPARARE L'ALIMENTAZIONE TX807C/CS 110D KIT DE REPARACION DE L'ALIMENTACION	35135370

T7017U PARTS LIST T7017U LISTE DE PIECES DETACHEES T7017U ERSATZTEILLISTE T7017U LISTA PARTI DI RICAMBIO T7017U LISTA DE PIEZAS DE REPUESTO	35151780
TX807C/CS SERVICE MANUAL TX807C/CS DOC TECHNIQUE TX807C/CS TECHNISCHE DOKUMENTATION TX807C/CS DOCUMENTAZIONE TECNICA TX807C/CS DOCUMENTACION TECNICA	35110300
TX807C/CS SERVICE MANUAL SUPPLEMENT TX807C/CS DOC TECHNIQUE ADDITIF TX807C/CS SECHNISCHE DOKUMENTATION ZUSAT TX807C/CS DOCUMENTAZIONE ADDITIVO TX807C/CS DOCUMENTACION ADITIVO	35141950
CDROM TX807 VERSION 2 CDROM TX807 VERSION 2 CDROM TX807 VERSION 2 CDROM TX807 VERSION 2 CDROM TX807 VERSION 2	35110290
TX807C/CS UM 10 LANGUAGES TX807C/CS NU 10 LANGUAGES TX807C/CS BA 10 LANGUAGES TX807C/CS IU 10 LANGUAGES TX807C/CS IU 10 LANGUAGES	50011430

OPTION
OPTION
OPTION
OPZIONE
OPCION

ST7040SB TV STAND ST7040SB MEUBLE TV ST7040SB TV-SCHRANK ST7040SB MOBILE TV ST7040SB MUEBLE TV	35151900

The description and characteristics given here are of informative significance only, and non committal. To keep up the high quality of our products, we reserve the right to make any changes or improvement without previous notice. • Les descriptions et caractéristiques figurant sur ce document sont données à titre d'information et non d'engagement. En effet, soucieux de la qualité de nos produits, nous nous réservons le droit d'effectuer, sans préavis, toute modification ou amélioration. • Die Beschreibungen und Daten in dieser Anleitung dienen nur zur Information und sind nicht bindend. Um die Qualität unserer Produkte ständig zu verbessern, behalten wir uns das Recht auf Änderungen vor. • Le descrizioni e le caratteristiche date su questo documento sono fornite a semplice titolo informativo e senza impegno. Ci riserviamo il diritto di eseguire, senza preavviso, qualsiasi modifica o miglioramento. • Las descripciones y características que figuran en este documento se dan a título de información y no de compromiso. En efecto, en bien de la calidad de nuestros productos, nos reservamos el derecho de efectuar, sin previo aviso, cualquier modificación o mejora.

THOMSON multimedia S.A au capital de 994 175 655 € - 46, Quai Alphonse Le Gallo 92648 Boulogne Cedex FRANCE - RCS NANTERRE B 333 773 174

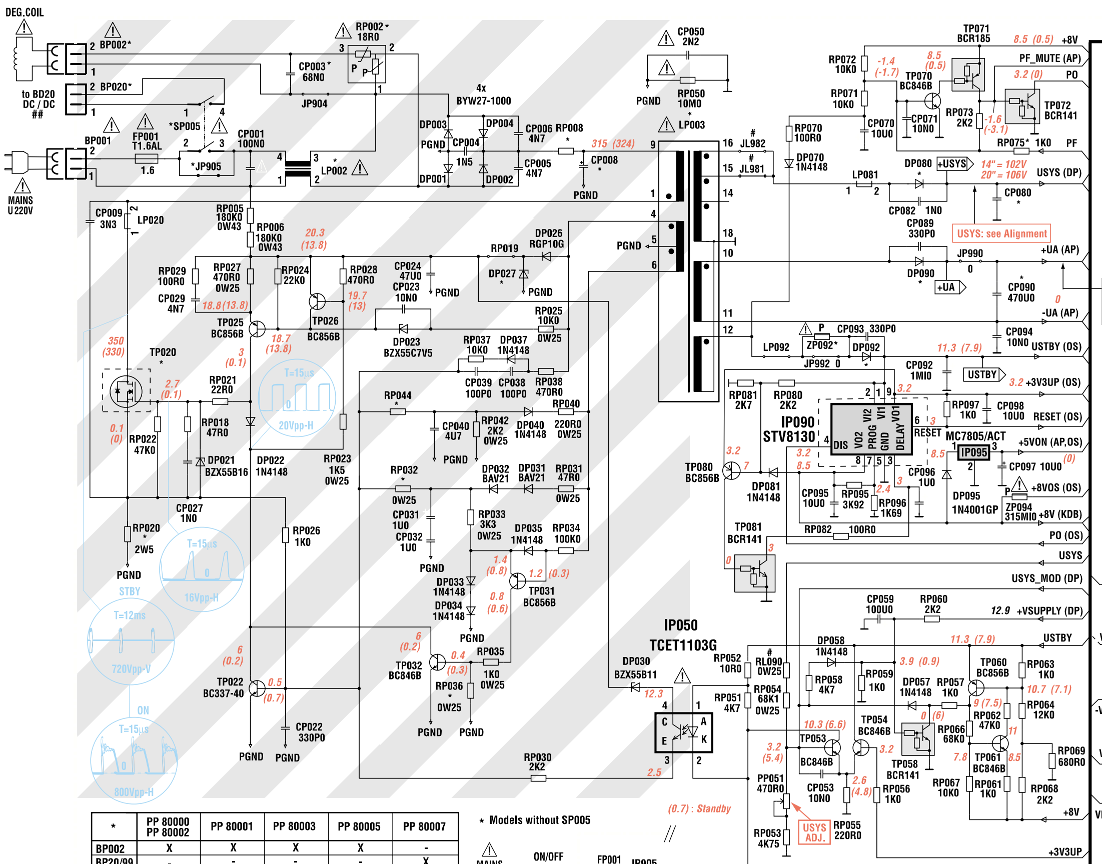

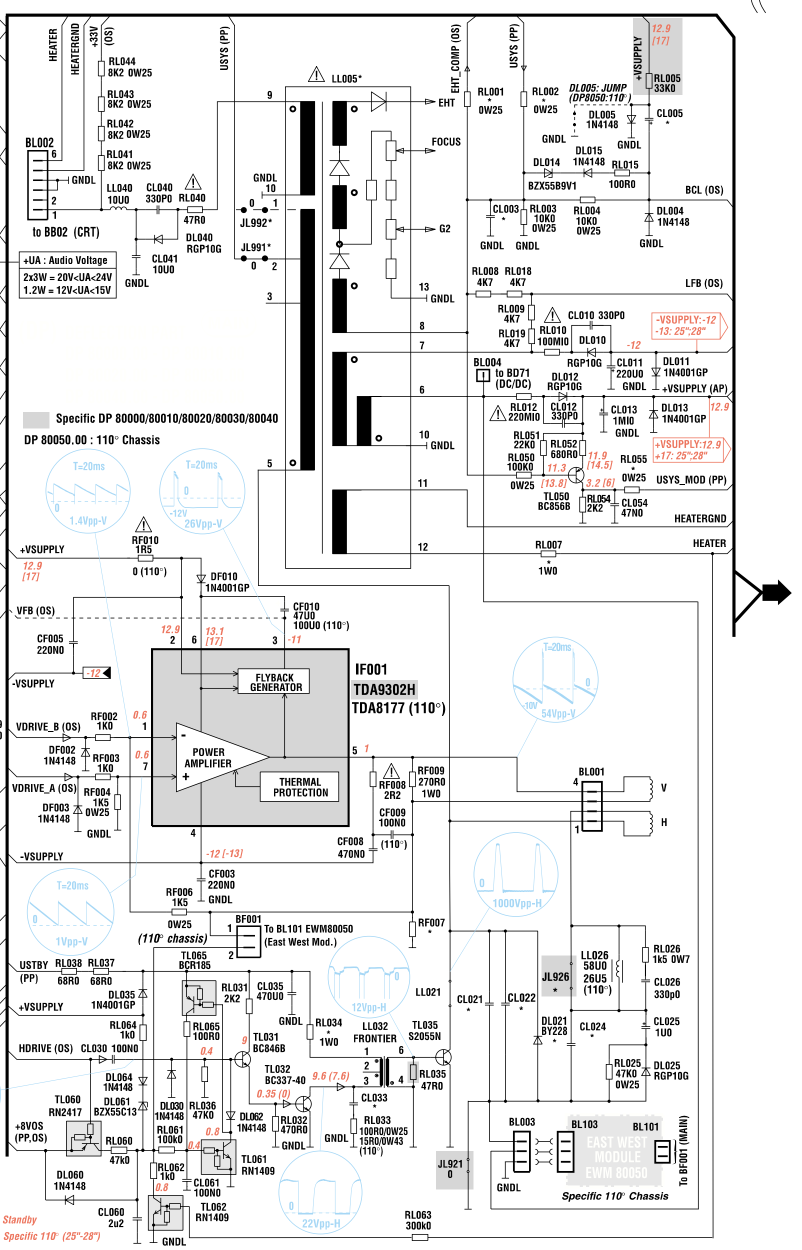

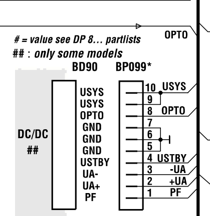

*	PP 80000 PP 80002	PP 80001	PP 80003	PP 80005	PP 80007
BP002	X	X	X	X	-
BP20/99	-	-	-	-	X
CP003	X	X	X	X	-
CP008	68U0	100U0	100U0	150U0	68U0
CP080	100U0	100U0	100U0	220U0	100U0
CP090	16.0V	25.0V	25.0V	25.0V	16.0V
DP027	BZX55B27	BZX55B27	BZX55B27	BZX55B30	BZX55B27
DP080	MUR160	MUR160	MUR160	MUR460	MUR160
DP090	RGP10G	MUR120	MUR120	RGP10G	RGP10G
DP092	MUR120	MUR120	MUR120	EGP10D	EGP10D
JP905	-	-	X	X	-
JP992	X	-	-	-	X
LP002	60M0	60M0	60M0	25M0	12M0
LP003	10658360	10656090	10656090	10693580	10658630
RP002	X	X	X	X	-
RP008	5R1/2.5W	5R1/2.5W	5R1/2.5W	4R7/3W	5R1/2.5W
RP020	1R0	1R0	1R0	680MI0	1R0
RP032	33K0	33K0	33K0	27K0	33K0
RP036	2K2	2K2	2K2	1K8	2K2
RP044	12K0	10K0	10K0	7K5	12K0
RP075	X	-	-	-	X
SP005	X	-	-	X	X
TP020	STP3NB90FP	STP3NB90FP	STP3NB90FP	STP3NB90FP	STP3NB90FP
ZP092	-	MP315	MP315	MP315	-

X : Inserted - : Not inserted

*	CL003	CL005	CL021	CL022	CL024	CL033	DL021	LL005	RF007	RF010	RL001	RL002	RL007	RL034	RL055	JL926	JL991	JL992
DP 80000 90° 4/3 10" Mini Neck	10N	4U7	6N6	330P	390N0	22N0	-	10658460	1R82	1R5	82K0	120K0	2R2 0.43W	47R0 1W0	68K0	X	-	X
DP 80010 90° 4/3 14" Mini Neck	10N	4U7	6N6	330P	440N0	22N0	-	10658340	1R82	1R5	82K0	100K0	2R2 1W0	39R0 1W0	68K0	X	-	X
DP 80020 90° 4/3 17" Mini Neck	10N	4U7	7N6	-	330N0	22N0	-	10658470	1R5	1R5	82K0	91K0	2R2 0.43W	33R0 1W0	68K0	X	X	-
DP 80030 90° 4/3 20" Narrow Neck	10N	4U7	7N6	-	440N0	22N0	-	10658470	1R5	1R5	82K0	82K0	1R0 1W0	33R0 1W0	68K0	X	-	X
DP 80040 90° 4/3 21" Narrow Neck	10N	4U7	8N3	-	440N0	22N0	-	10654690	1R21	1R5	91K0	91K0	1R0 1W0	27R0 1W0	68K0	-	-	X
DP 80050 110° 4/3 25" - 21"Narrow Neck	22N	2U2	14N6	-	440N0	100N0	X	10654690	1R21	0	220K0	91K0	1R0 1W0	10R0 0W43	220K0	-	-	X

* Models without SP005

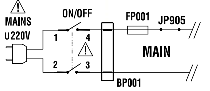

⚠

Use isolating mains transformer
Utilise un transformateur isolateur du secteur
Einen Trenntrafo verwenden
Utilizar un transformador aislador de red
Utilizzare un transformatore per isolarvi dalla rete

Part of board connected to mains supply.
Partie du chassis reliée au secteur.
Primärseite des Netzteils.
Parte dello châssis collegata alla rete.
Parte del chasis conectada a la red.

Note :
Power Supply primary circuit measurements.
- Use only (**PGND**) connection point.

Attention :
Mesure dans la partie primaire de l'alimentation
- Utiliser la masse du bloc alimentation (**PGND**).

Achtung :
Bei Messungen im Primärnetzteil
- Primärnetzteilmasse verwenden (**PGND**).

Attenzione :
misure nell'alimentatore primario
- usare massa alimentazione primario (**PGND**).

Cuidado :
Medida en el bloque de alimentacion
- Utilizar la masa del bloque de alimentacion (**PGND**).

⚠ Indicates critical safety components, and identical components should be used for replacement. Only then can the operational safety be garanteed.

Le remplacement des éléments de securité (repérés avec le symbole ⚠ par des composants non homologués selon la Norme CEI 65 entraine la non-conformité de l'appareil. Dans ce cas, la responsabilité du fabricant n'est plus engagée.

Wenn Sicherheitsteile (mit dem Symbol ⚠ gekennzeichnet) durch nicht normgerechte Teile ersetzt werden, erlischt die Haftung des Herstellers.

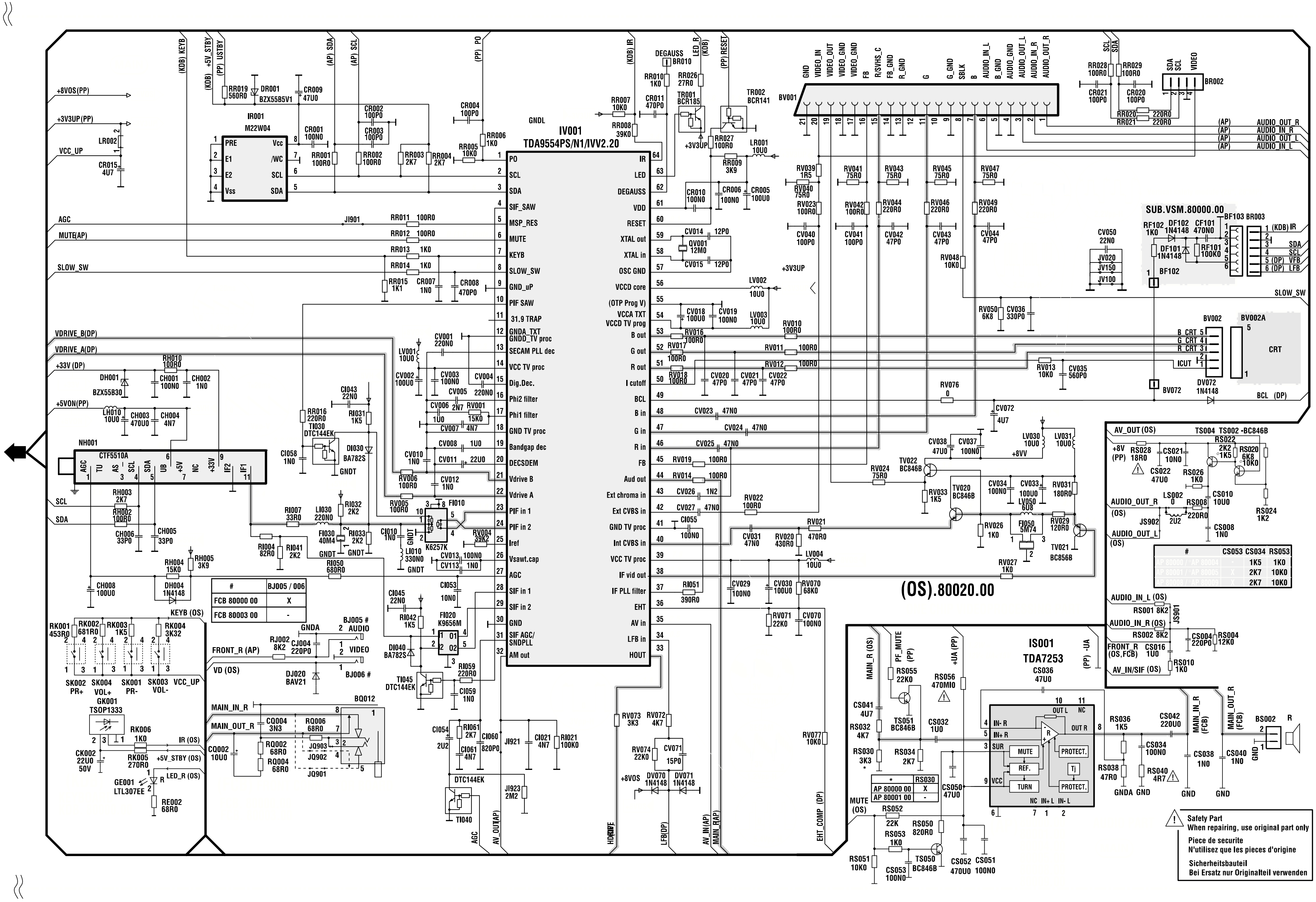

#	BJ005 / 006
FCB 80000 00	X
FCB 80003 00	-

#	CS053	CS034	RS053
AP 80000 / °AP 80004	-	1K5	1K0
AP 80001 / °AP 80005	X	2K7	10K0
AP 80008 / °AP 80009	X	2K7	10K0

*	RS030
AP 80000 00	X
AP 80001 00	-

⚠ Safety Part
When repairing, use original part only
Piece de securite
N'utilisez que les pieces d'origine
Sicherheitsbauteil
Bei Ersatz nur Originalteil verwenden

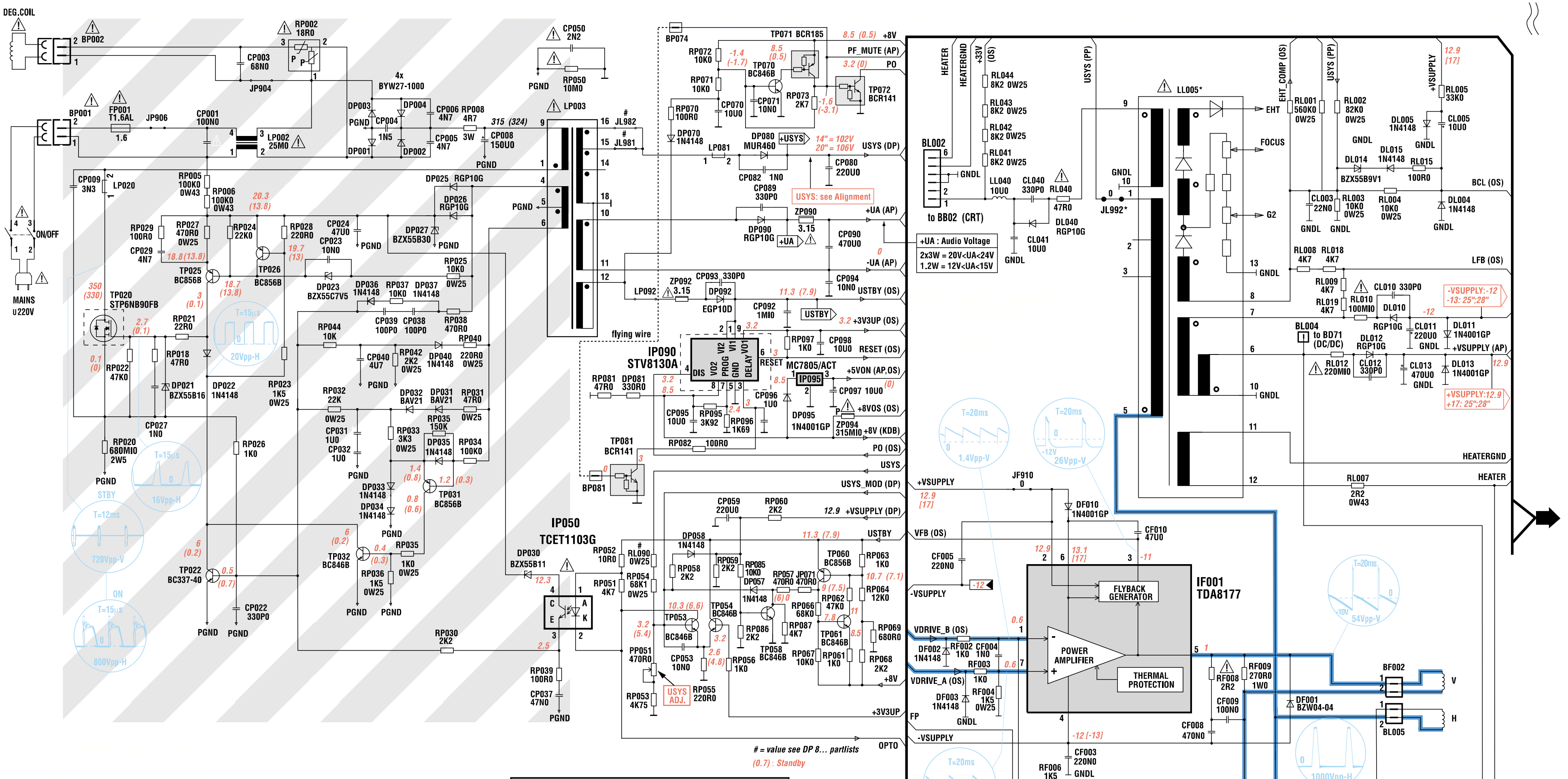

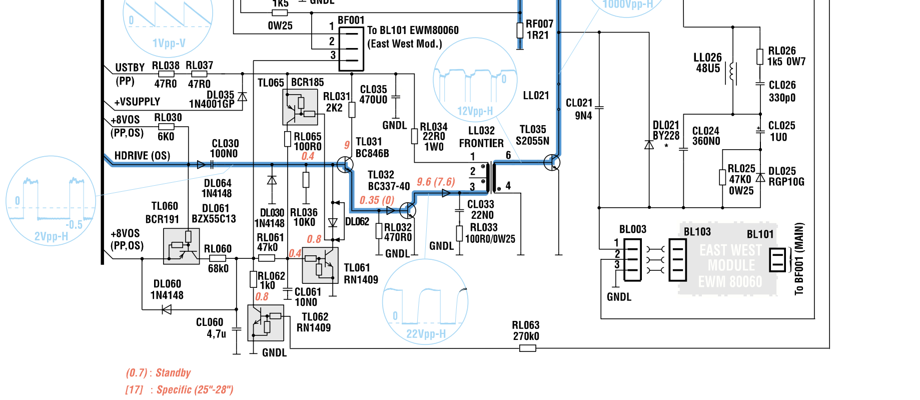

⚠
Use isolating mains transformer
Utilise un transformateur isolateur du secteur
Einen Trenntrafo verwenden
Utilizar un transformador aislador de red
Utilizzare un trasformatore per isolarvi dalla rete

Part of board connected to mains supply.
Partie du chassis reliée au secteur.
Primärseite des Netzteils.
Parte dello chàssis collegata alla rete.
Parte del chasis conectada a la red.

Note :
Power Supply primary circuit measurements.
- Use only **(PGND)** connection point.

Attention :
Mesure dans la partie primaire de l'alimentation
- Utiliser la masse du bloc alimentation **(PGND)**.

Achtung :
Bei Messungen im Primärnetzteil
- Primärnetzteilmasse verwenden **(PGND)**.

Attenzione :
misure nell'alimentatore primario
- usare massa alimentazione primario **(PGND)**.

Cuidado :
Medida en el bloque de alimentacion
- Utilizar la masa del bloque de alimentacion **(PGND)**.

⚠ Indicates critical safety components, and identical components should be used for replacement. Only then can the operational safety be garanteed.

Le remplacement des elements de sécurité (repérés avec le symbole ⚠) par des composants non homologués selon la Norme CEI 65 entraine la non-conformite de l'appareil.
Dans ce cas, la responsabilité du fabricant n'est plus engagée.

Wenn Sicherheitsteile (mit dem Symbol ⚠ gekennzeichnet) durch nicht normgerechte Teile ersetzt werden, erlischt die Haftung des Herstellers.

La sostituzione degli elementi di sicurezza (marcati con il segno ⚠) con componenti non omologati secondo la norma CEI 65 comporta la non conformità dell'apparecchio.
In tal caso è "esclusa la responsabilità" del costruttore.

La sustitución de elementos de seguridad (marcados con el simbolo ⚠) por componentes no homologados segun la norma CEI 65, provoca la no conformidad del aparato.
En ese caso, el fabricante cesa de ser responsable.

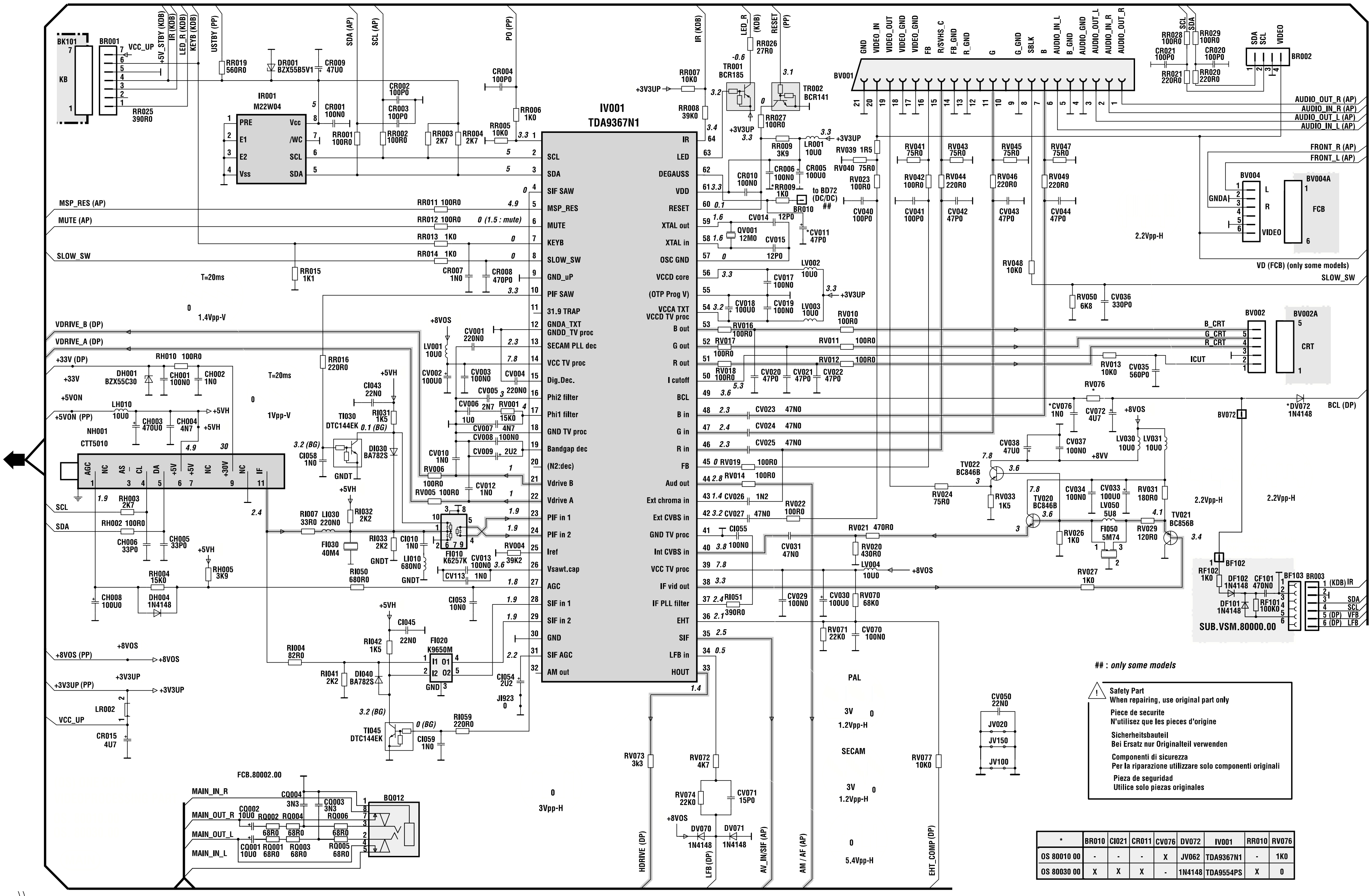

Safety Part
When repairing, use original part only

Piece de securite
N'utilisez que les pieces d'origine

Sicherheitsbauteil
Bei Ersatz nur Originalteil verwenden

Componenti di sicurezza
Per la riparazione utilizzare solo componenti originali

Pieza de seguridad
Utilice solo piezas originales

*	BR010	CI021	CR011	CV076	DV072	IV001	RR010	RV076
OS 80010 00	-	-	-	X	JV062	TDA9367N1	-	1K0
OS 80030 00	X	X	X	-	1N4148	TDA9554PS	X	0

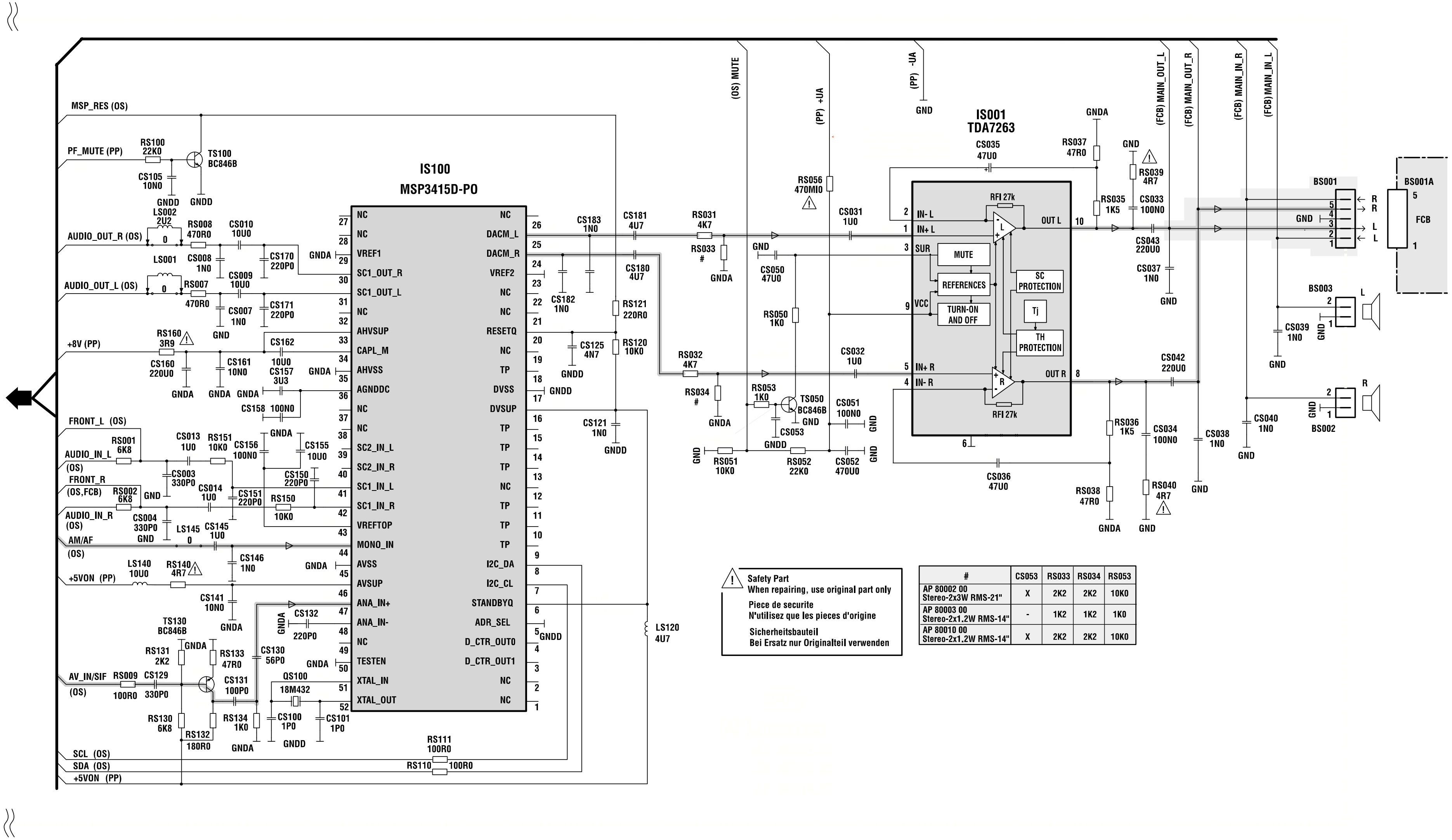

⚠ Safety Part
When repairing, use original part only
Piece de securite
N'utilisez que les pieces d'origine
Sicherheitsbauteil
Bei Ersatz nur Originalteil verwenden

#	CS053	RS033	RS034	RS053
AP 80002 00 Stereo-2x3W RMS-21"	X	2K2	2K2	10K0
AP 80003 00 Stereo-2x1.2W RMS-14"	-	1K2	1K2	1K0
AP 80010 00 Stereo-2x1.2W RMS-14"	X	2K2	2K2	10K0

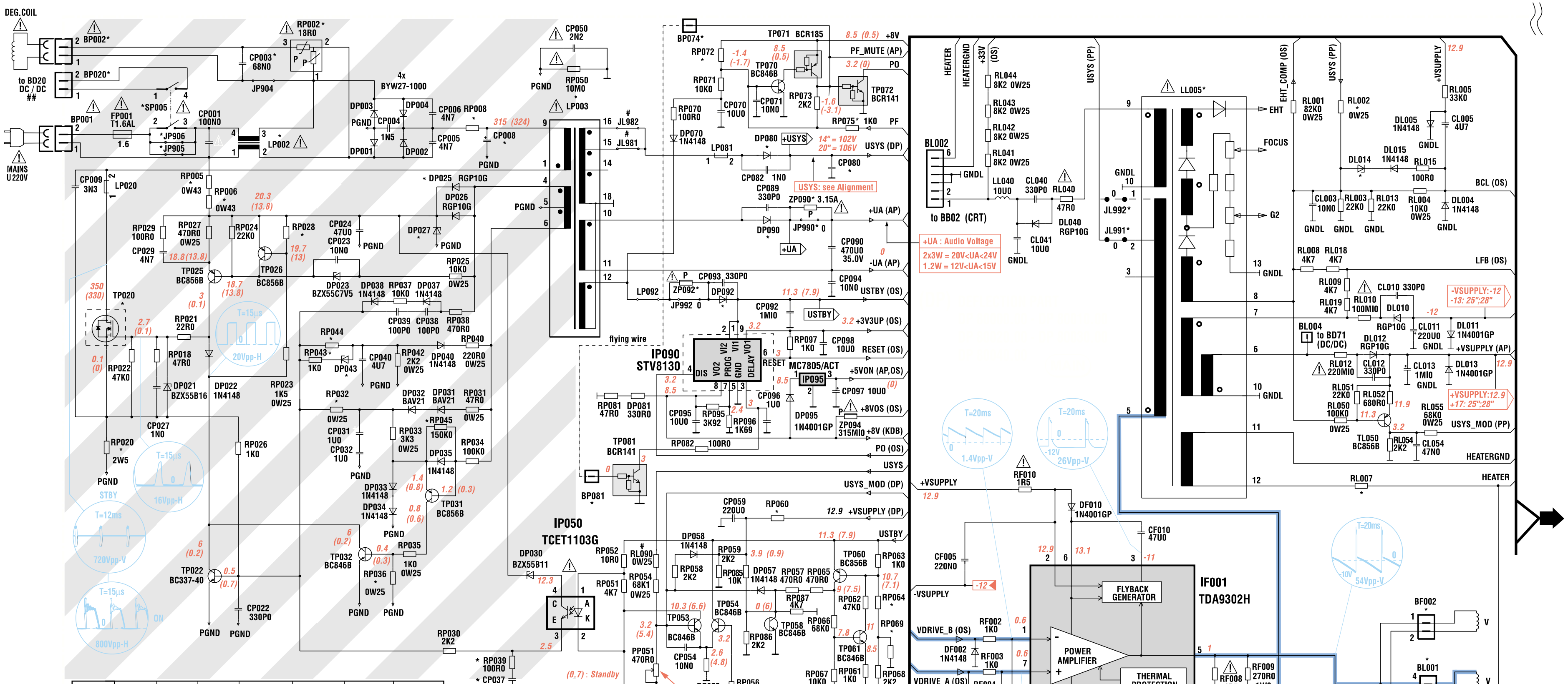

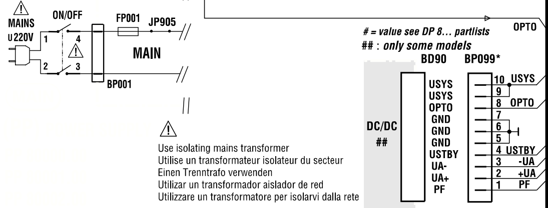

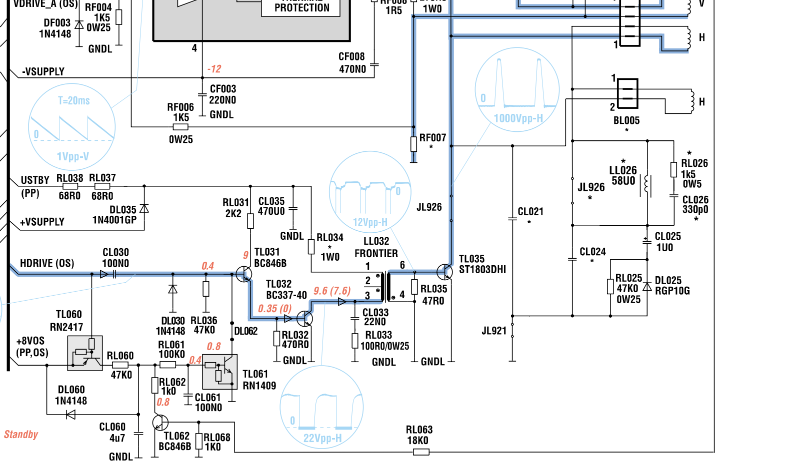

*	PP 80000 PP 80002	PP 80001	PP 80003	PP 80005	PP 80007	PP 80012	PP 80014
BP002	X	X	X	X	-	X	X
BP074/81	-	-	-	X	-	X	X
BP20/99	-	-	-	-	X	-	-
CP003/008	X/68U0	X/100U0	X/100U0	X/150U0	-/68U0	X/150U0	X/150U0
CP037/080	-/100U0	-/100U0	-/100U0	X/220U0	-/100U0	X/220U0	X/220U0
DP025	-	-	-	X	-	X	X
DP027	BZX55B27	BZX55B27	BZX55B27	BZX55B30	BZX55B27	BZX55B27	BZX55B27
DP043	BZX55B16	BZX55B16	BZX55B16	-	BZX55B27	BZX55B30	BZX55B30
DP080	MUR160	MUR160	MUR160	MUR460	MUR160	MUR460	MUR460
DP090	RGP10G	MUR120	MUR120	RGP10G	RGP10G	RGP10G	EGP10D
DP092	MUR120	MUR120	MUR120	EGP10D	EGP10D	EGP10D	EGP10D
JP905/906	- / -	- / -	X / -	- / X	- / -	- / X	- / X
JP990/992	X / X	X / -	X / -	- / -	X / X	- / -	- / -
LP002	60M0	60M0	60M0	25M0	60M0	25M0	25M0
LP003	10658360	10656090	10656090	10693580	10658630	10736160	10741180
RP002	X	X	X	X	-	X	X
RP008	5R1/2.5W	5R1/2.5W	5R1/2.5W	4R7/3W	5R1/2.5W	4R7/3W	4R7/3W
RP020	1R0	1R0	1R0	680MI0	1R0	680MI0	680MI0
RP032/36	33K0/2K2	33K0/2K2	33K0/2K2	27K0/1K5	33K0/2K2	27K0/1K8	27K0/1K8
RP039/43	- / X	- / X	- / X	X / -	- / X	X / -	X / -
RP044/45	12K0 / -	10K0 / -	10K0 / -	9K1 / X	12K0 / -	9K1 / X	9K1 / X
RP060/64	2K2/12K0	2K2/12K0	2K2/12K0	3K3/14K0	2K2/12K0	3K3/14K0	3K3/14K0
RP069/72	680R0/10K0			14K0/220R0	12K/680R0	14K/220R0	
RP075	X	-	-	-	X	-	-
SP005	X	-	-	X	X	X	X
TP020	STP3NB90FP			STP6NB90FP	STP3NB90FP	STP6NB90FP	
ZP090/92	- / -	- / MP315	- / -	X / MP315	- / -	X / MP315	X / MP315

X : Inserted - : Not inserted

*	BF002	BL001	BL005	CL021	CL024	CL026	DL014	LL005	LL026	RF007	RL002	RL007	RL026	RL034	JL926	JL991	JL992
DP 80000 90° 4/3 10" Mini Neck	-	X	-	6N6	390N0	-	BZX55B9V1	10720190	-	1R82	150K0	2R2	-	47R0	X	-	X
DP 80010 90° 4/3 14" Mini Neck	-	X	-	6N6	440N0	-	BZX55B9V1	10720200	-	1R82	100K0	2R2	-	39R0	X	-	X
DP 80020 90° 4/3 17" Mini Neck	-	X	-	7N6	390N0	-	BZX55B9V1	10658470	-	1R5	91K0	2R2	-	33R0	X	X	-
DP 80030 90° 4/3 20" Narrow Neck	X	-	X	7N6	560N0	-	BZX55B11	10658470	-	1R5	82K0	1R0	-	33R0	X	-	X
DP 80040 90° 4/3 21" Narrow Neck	X	-	X	8N3	440N0	X	BZX55B11	10654690	X	1R21	91K0	1R0	X	22R0	-	-	X

⚠
Use isolating mains transformer
Utilise un transformateur isolateur du secteur
Einen Trenntrafo verwenden
Utilizar un transformador aislador de red
Utilizzare un transformatore per isolarvi dalla rete

Part of board connected to mains supply.
Partie du chassis reliée au secteur.
Primärseite des Netzteils.
Parte dello châssis collegata alla rete.
Parte del chasis conectada a la red.

Note :
Power Supply primary circuit measurements.
- Use only (**PGND**) connection point.

Attention :
Mesure dans la partie primaire de l'alimentation
- Utiliser la masse du bloc alimentation (**PGND**).

Achtung :
Bei Messungen im Primärnetzteil
- Primärnetzteilmasse verwenden (**PGND**).

Attenzione :
misure nell'alimentatore primario
- usare massa alimentazione primario (**PGND**).

Cuidado :
Medida en el bloque de alimentacion
- Utilizar la masa del bloque de alimentacion (**PGND**).

(0.7) : Standby

⚠ Indicates critical safety components, and identical components should be used for replacement. Only then can the operational safety be garanteed.

Le remplacement des éléments de sécurité (repérés avec le symbole ⚠ par des composants non homologués selon la Norme CEI 65 entraine la non-conformité de l'appareil. Dans ce cas, la responsabilité du fabricant n'est plus engagée.

Wenn Sicherheitsteile (mit dem Symbol ⚠ gekennzeichnet) durch nicht normgerechte Teile ersetzt werden, erlischt die Haftung des Herstellers.

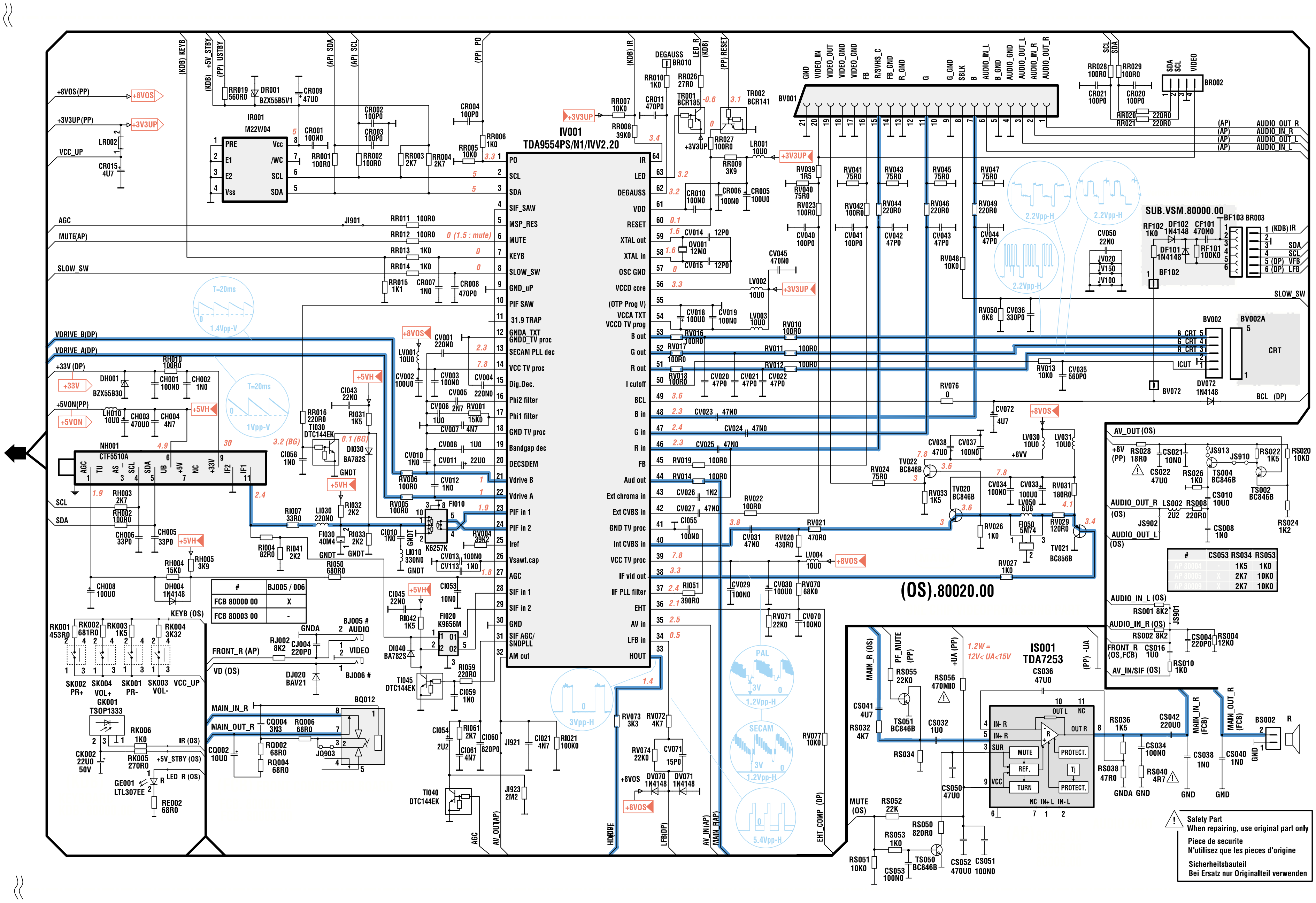

#	BJ005 / 006
FCB 80000 00	X
FCB 80003 00	-

#	CS053	RS034	RS053
	1K5	1K0	
	2K7	10K0	
	2K7	10K0	

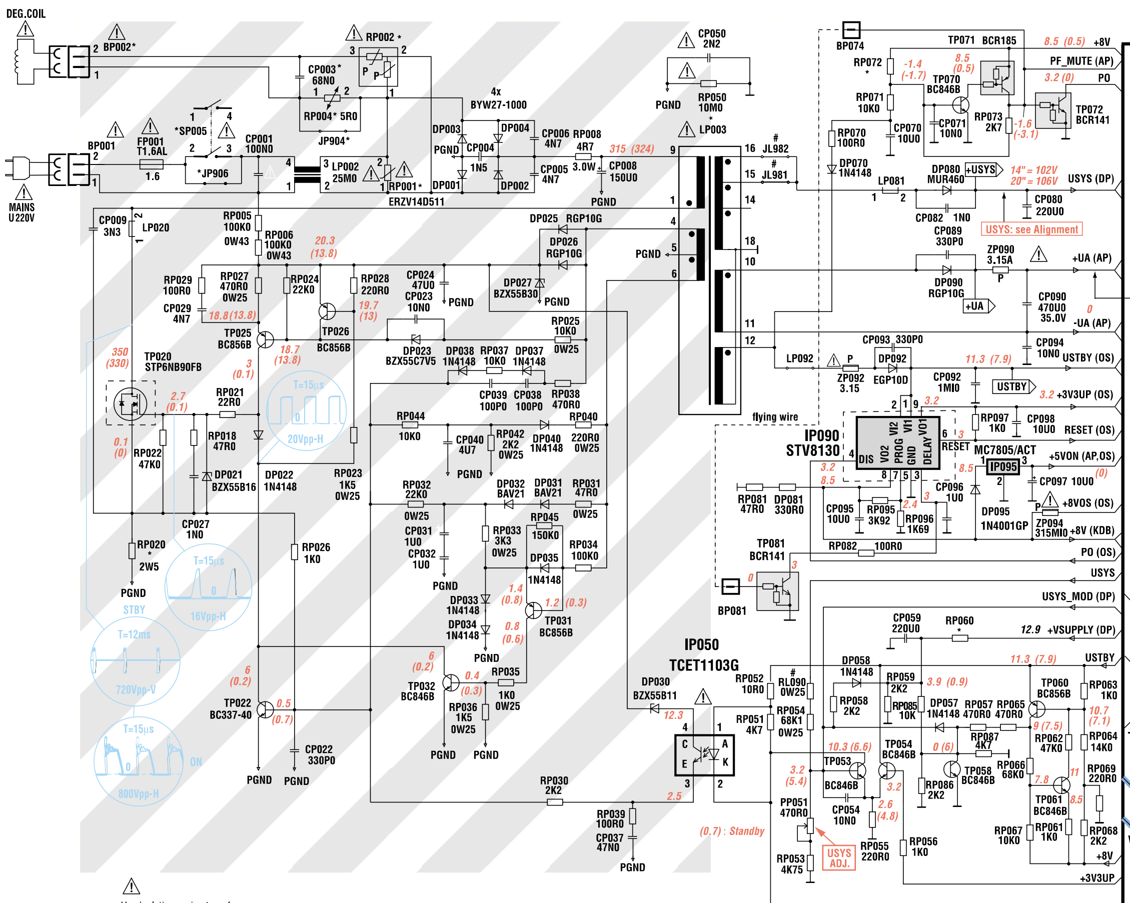

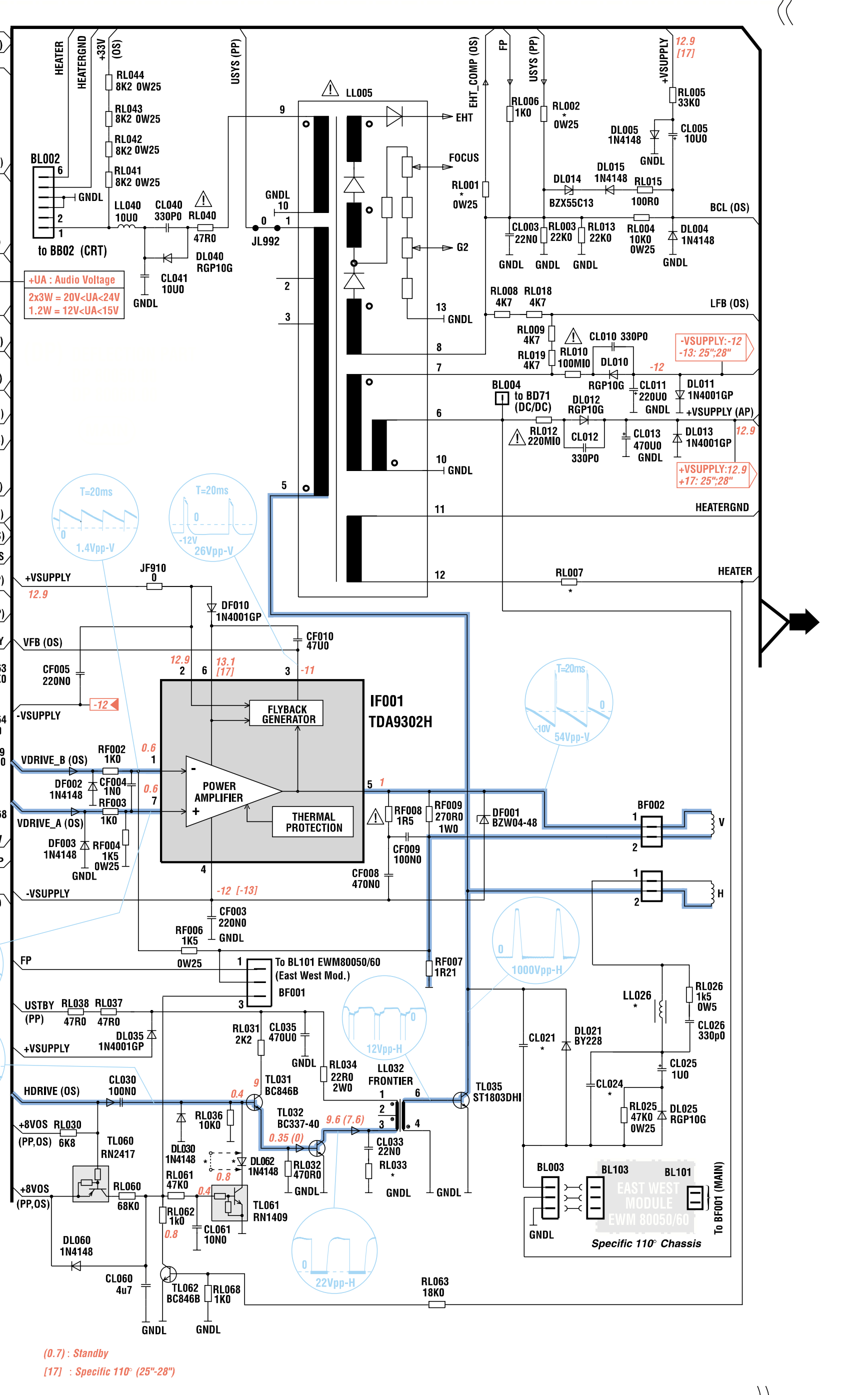

Use isolating mains transformer
Utilise un transformateur isolateur du secteur
Einen Trenntrafo verwenden
Utilizar un transformador aislador de red
Utilizzare un transformatore per isolarvi dalla rete

Part of board connected to mains supply.
Partie du chassis reliée au secteur.
Primärseite des Netzteils.
Parte dello châssis collegata alla rete.
Parte del chasis conectada a la red.

* Models without SP005

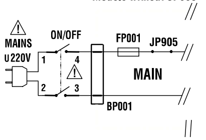

*	JP904	JP906	LP003	RP001	RP002	RP004	RP072	SP005
PP 80009 00	X	X	10713640	-	18R0	-	9K1	-
PP 80010 00	X	-	10713640	-	18R0	-	9K1	X
PP 80011 00	-	X	10713640	X	9R0	X	14K0	-
PP 80013 00	X	X	10736160	-	18R0	-	10K0	-

*	CL021	CL024	DL062	LL026	RL001	RL002	RL007	RL033
DP 80050 Chasis 110° 25" - 28" MP	14N6	440N0	WIRE	26U5	330K0 0W25	91K0 0W25	1R0 1W	150R0 0W43
DP 80060 Chasis 110° 21" XF	9N4	330N0	X	48U5	560K0 0W25	82K0 0W25	2R2 0W43	100R0 0W25

X : Inserted **-** : Not inserted

Note :
Power Supply primary circuit measurements.
- Use only (**PGND**) connection point.

Attention :
Mesure dans la partie primaire de l'alimentation
- Utiliser la masse du bloc alimentation (**PGND**).

Achtung :
Bei Messungen im Primärnetzteil
- Primärnetzteilmasse verwenden (**PGND**).

Attenzione :
misure nell'alimentatore primario
- usare massa alimentazione primario (**PGND**).

Cuidado :
Medida en el bloque de alimentacion
- Utilizar la masa del bloque de alimentacion (**PGND**).

⚠ Indicates critical safety components, and identical components should be used for replacement. Only then can the operational safety be garanteed.

Le remplacement des éléments de sécurité (repérés avec le symbole ⚠ par des composants non homologués selon la Norme CEI 65 entraine la non-conformité de l'appareil. Dans ce cas, la responsabilité du fabricant n'est plus engagée.

Wenn Sicherheitsteile (mit dem Symbol ⚠ gekennzeichnet) durch nicht normgerechte Teile ersetzt werden, erlischt die Haftung des Herstellers.

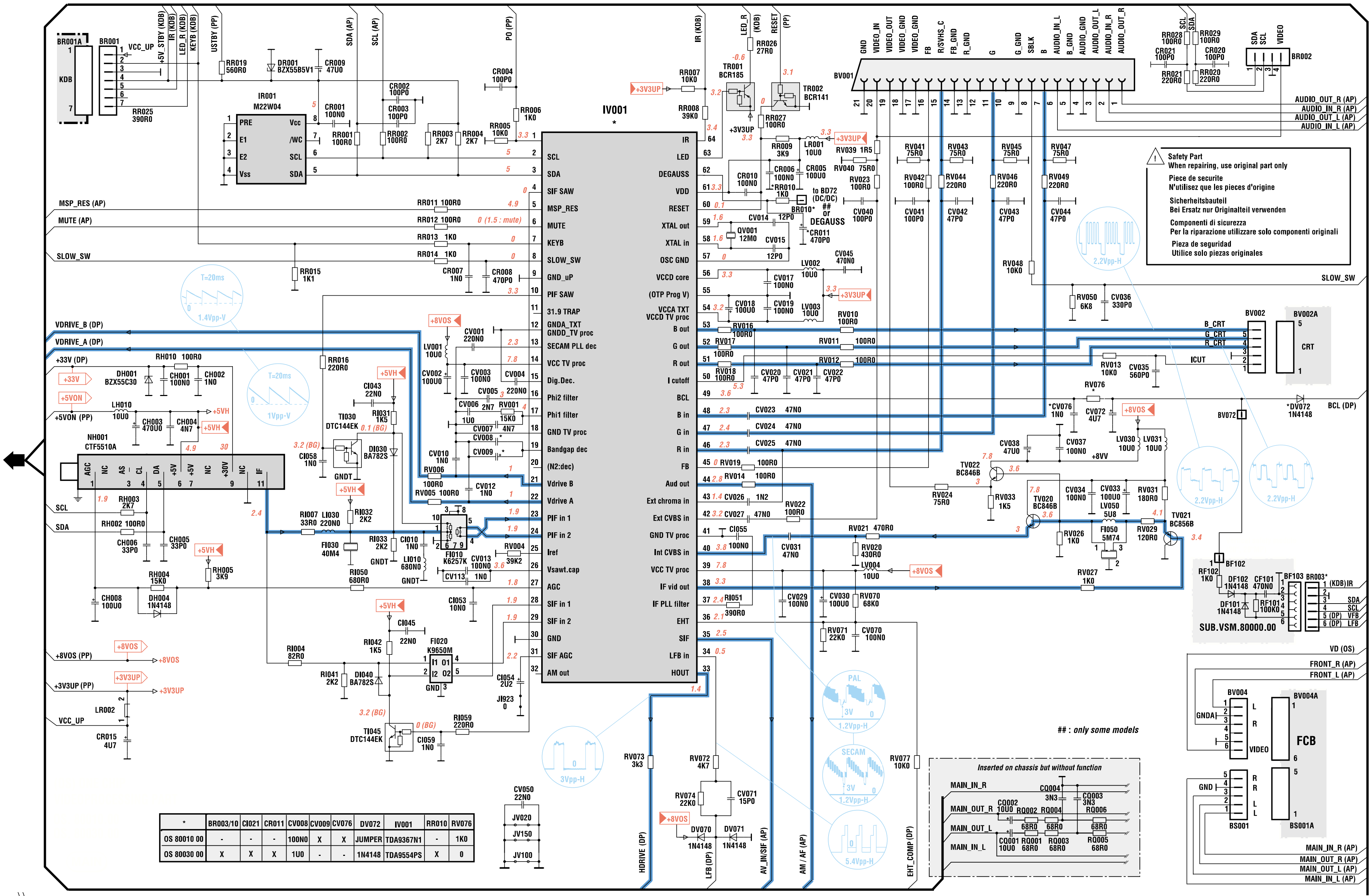

*	BR003/10	CI021	CR011	CV008	CV009	CV076	DV072	IV001	RR010	RV076
OS 80010 00	-	-	-	100N0	X	X	JUMPER	TDA9367N1	-	1K0
OS 80030 00	X	X	X	1U0	-	-	1N4148	TDA9554PS	X	0

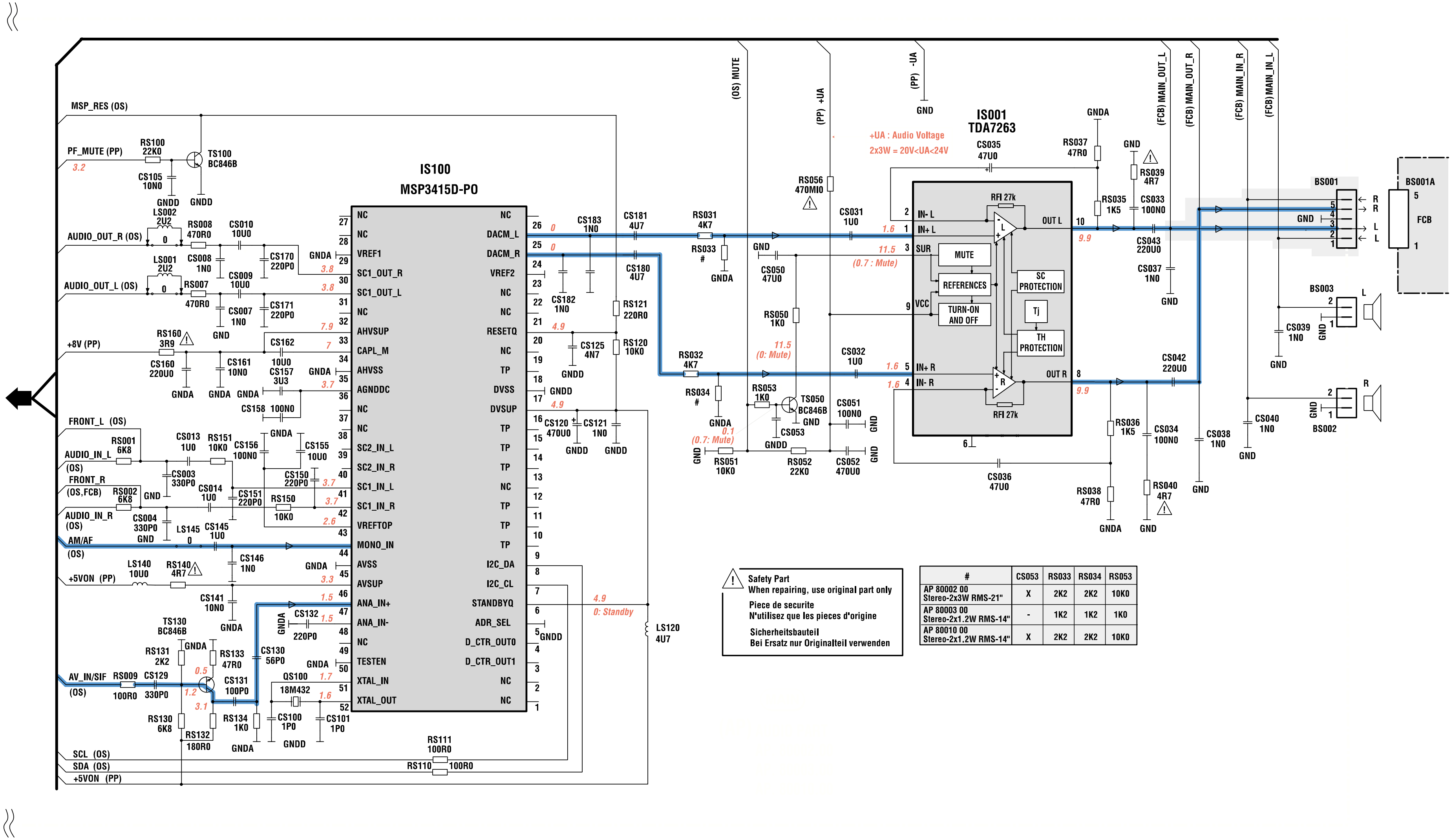

Safety Part
When repairing, use original part only

Piece de securite
N'utilisez que les pieces d'origine

Sicherheitsbauteil
Bei Ersatz nur Originalteil verwenden

#	CS053	RS033	RS034	RS053
AP 80002 00 Stereo-2x3W RMS-21"	X	2K2	2K2	10K0
AP 80003 00 Stereo-2x1.2W RMS-14"	-	1K2	1K2	1K0
AP 80010 00 Stereo-2x1.2W RMS-14"	X	2K2	2K2	10K0

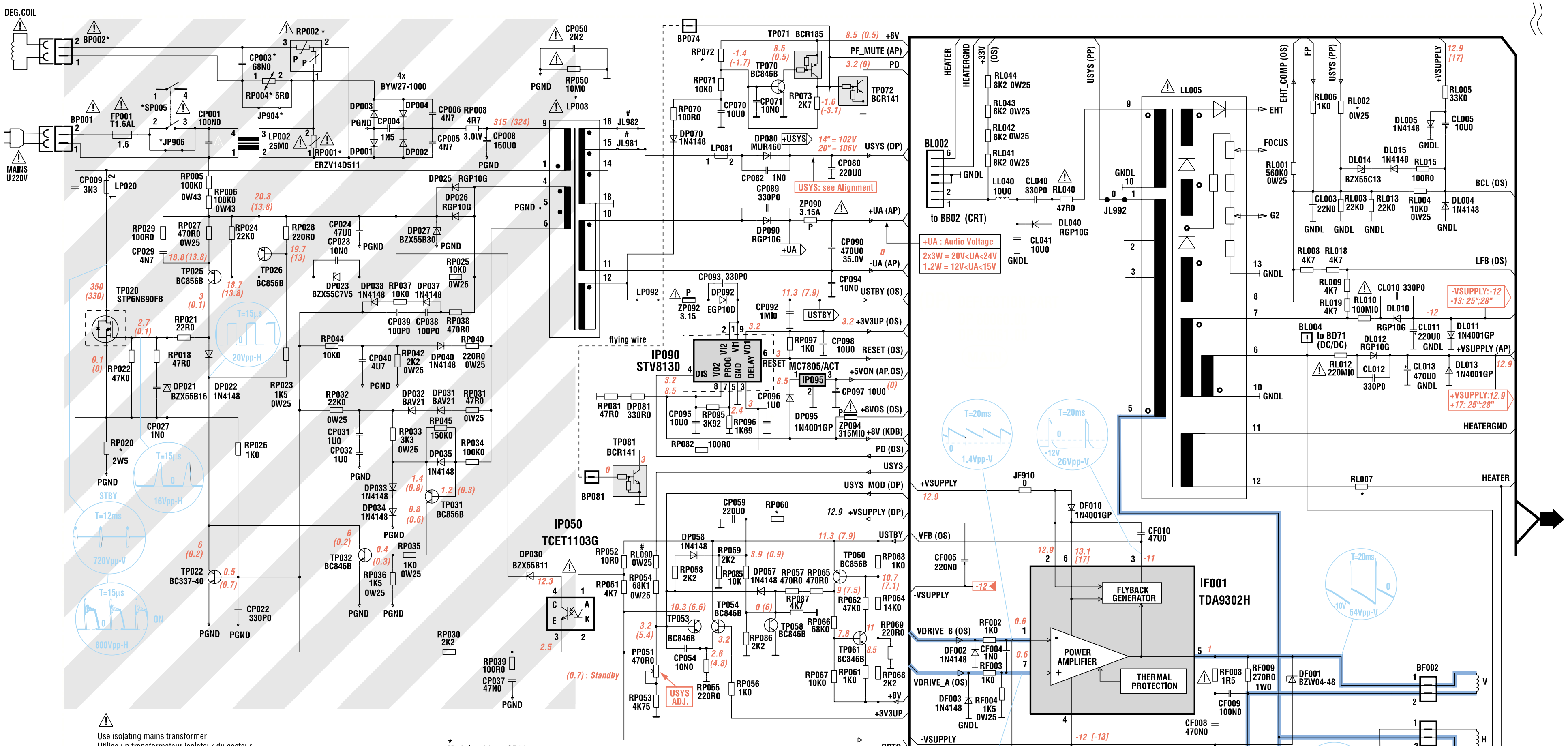

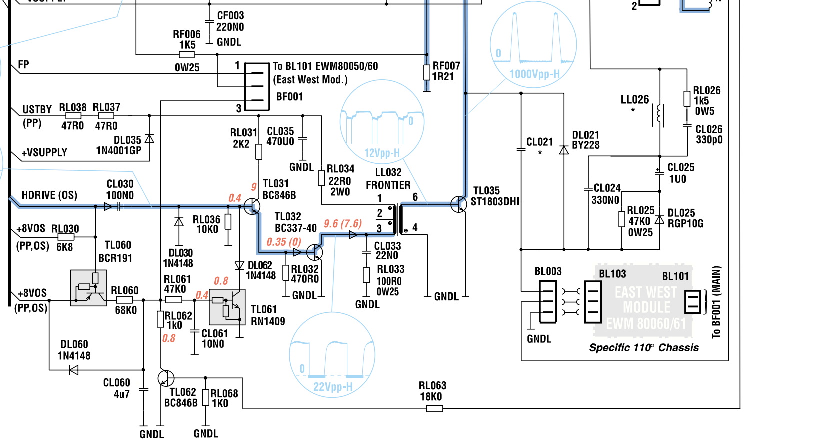

⚠
Use isolating mains transformer
Utilise un transformateur isolateur du secteur
Einen Trenntrafo verwenden
Utilizar un transformador aislador de red
Utilizzare un transformatore per isolarvi dalla rete

* Models without SP005

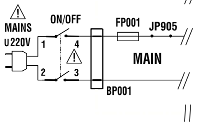

Part of board connected to mains supply.
Partie du chassis reliée au secteur.
Primärseite des Netzteils.
Parte dello châssis collegata alla rete.
Parte del chasis conectada a la red.

\# = value see DP 8... partlists

(0.7) : Standby

*	JP904	JP906	LP003	RP001	RP002	RP004	RP072	SP005
PP 80009 00	X	X	10713640	-	18R0	-	9K1	-
PP 80010 00	X	-	10713640	-	18R0	-	9K1	X
PP 80011 00	-	X	10713640	X	9R0	X	14K0	-
PP 80013 00	X	X	10736160	-	18R0	-	10K0	-

*	CL021	LL026	RL002	RL007
DP 80060 Chassis 110° 21" XF	9N4	48U5	82K0 0W25	2R2 0W43
DP 80061 110° - Tube 21" XF-A51ERF135X70	8N8	58U0	91K0 0W25	2R7 0W43

X : Inserted **-** : Not inserted

Note :
Power Supply primary circuit measurements.
- Use only (**PGND**) connection point.

Attention :
Mesure dans la partie primaire de l'alimentation
- Utiliser la masse du bloc alimentation (**PGND**).

Achtung :
Bei Messungen im Primärnetzteil
- Primärnetzteilmasse verwenden (**PGND**).

Attenzione :
misure nell'alimentatore primario
- usare massa alimentazione primario (**PGND**).

Cuidado :
Medida en el bloque de alimentacion
- Utilizar la masa del bloque de alimentacion (**PGND**).

⚠ Indicates critical safety components, and identical components should be used for replacement. Only then can the operational safety be garanteed.

Le remplacement des éléments de sécurité (repérés avec le symbole ⚠ par des composants non homologués selon la Norme CEI 65 entraine la non-conformité de l'appareil. Dans ce cas, la responsabilité du fabricant n'est plus engagée.

Wenn Sicherheitsteile (mit dem Symbol ⚠ gekennzeichnet) durch nicht normgerechte Teile ersetzt werden, erlischt die Haftung des Herstellers.

(0.7) : Standby
[17] : Specific 110° (25"-28")

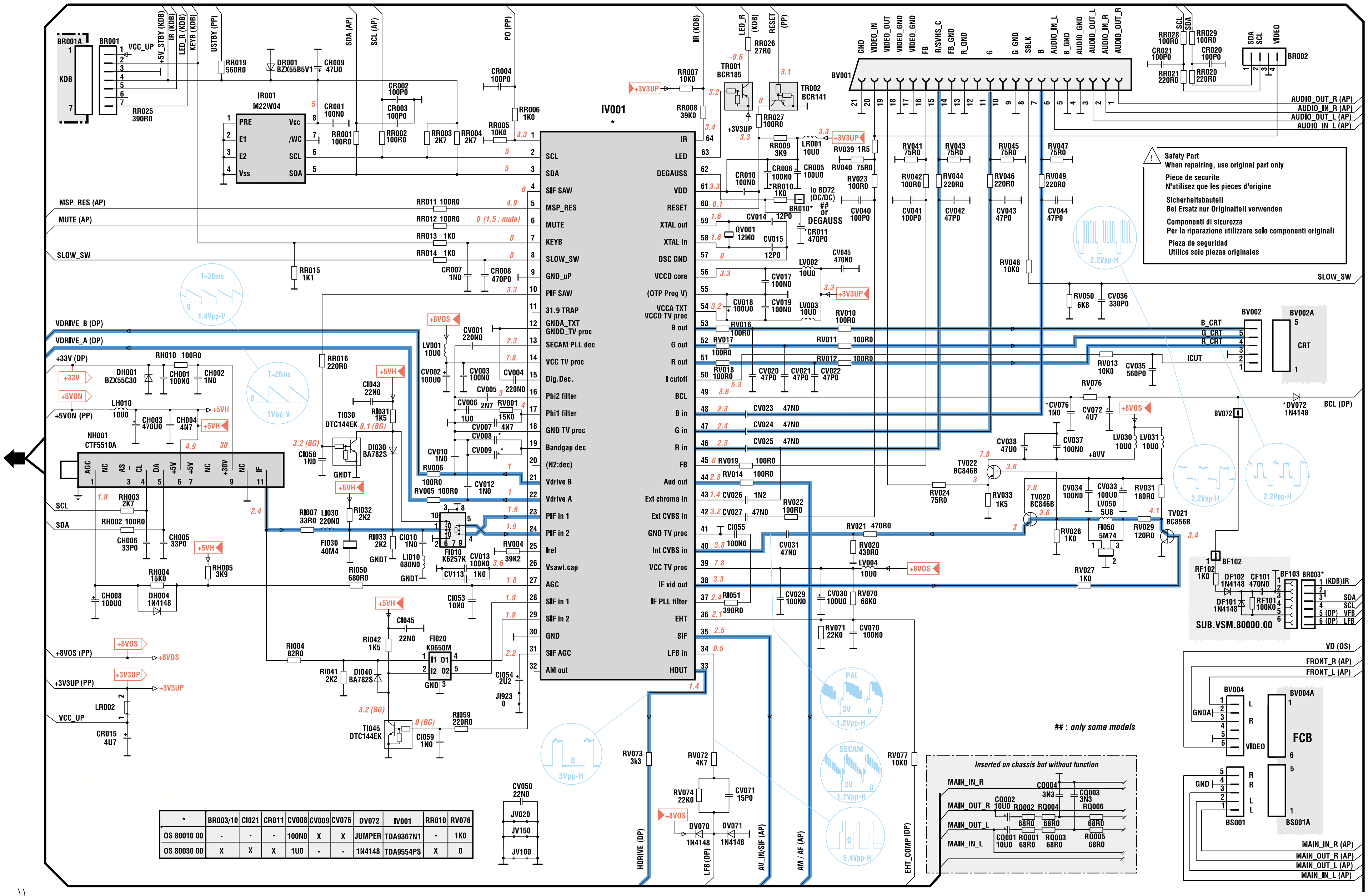

*	BR003/10	CI021	CR011	CV008	CV009	CV076	DV072	IV001	RR010	RV076
OS 80010 00	-	-	-	100N0	X	X	JUMPER	TDA9367N1	-	1K0
OS 80030 00	X	X	X	1U0	-	-	1N4148	TDA9554PS	X	0

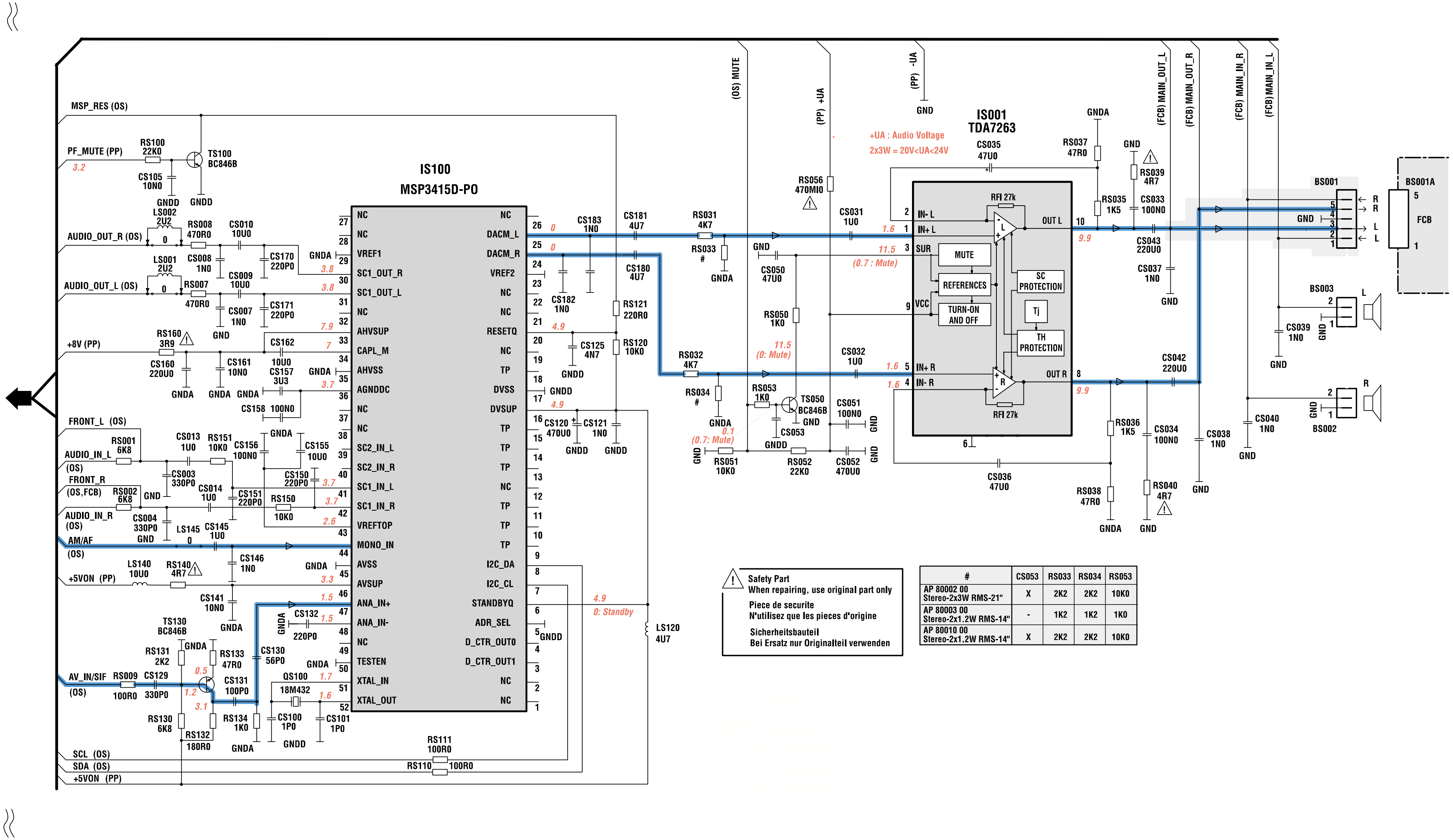

#	CS053	RS033	RS034	RS053
AP 80002 00 Stereo-2x3W RMS-21"	X	2K2	2K2	10K0
AP 80003 00 Stereo-2x1.2W RMS-14"	-	1K2	1K2	1K0
AP 80010 00 Stereo-2x1.2W RMS-14"	X	2K2	2K2	10K0

TUNER CTT5000

(FREQUENCY SYNTHESIS - SYNTHESE DE FREQUENCE - FREQUENZSYNTHESE - SINTESI DI FREQUENZA - SINTESIS DE FRECUENCIA)

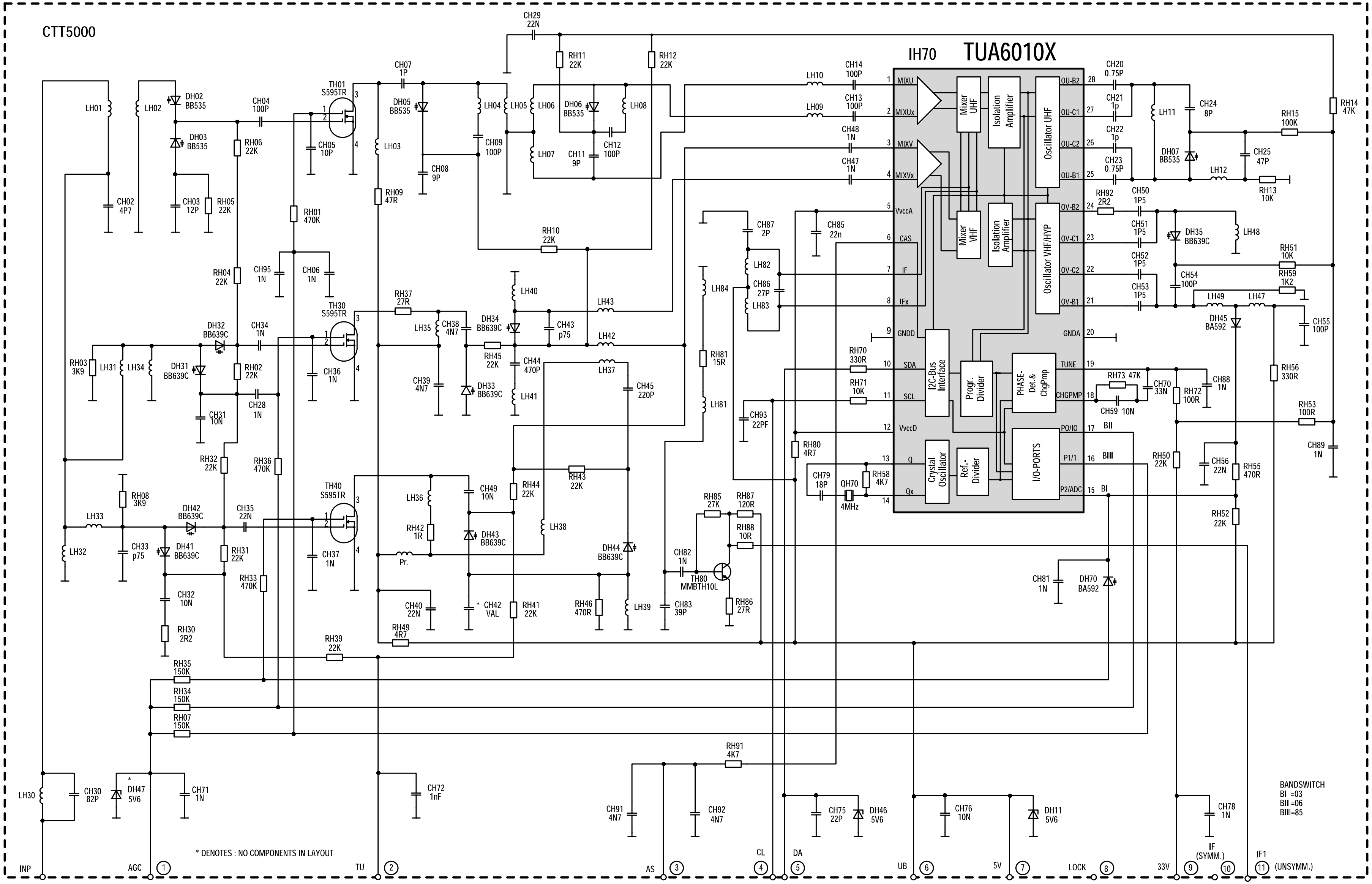

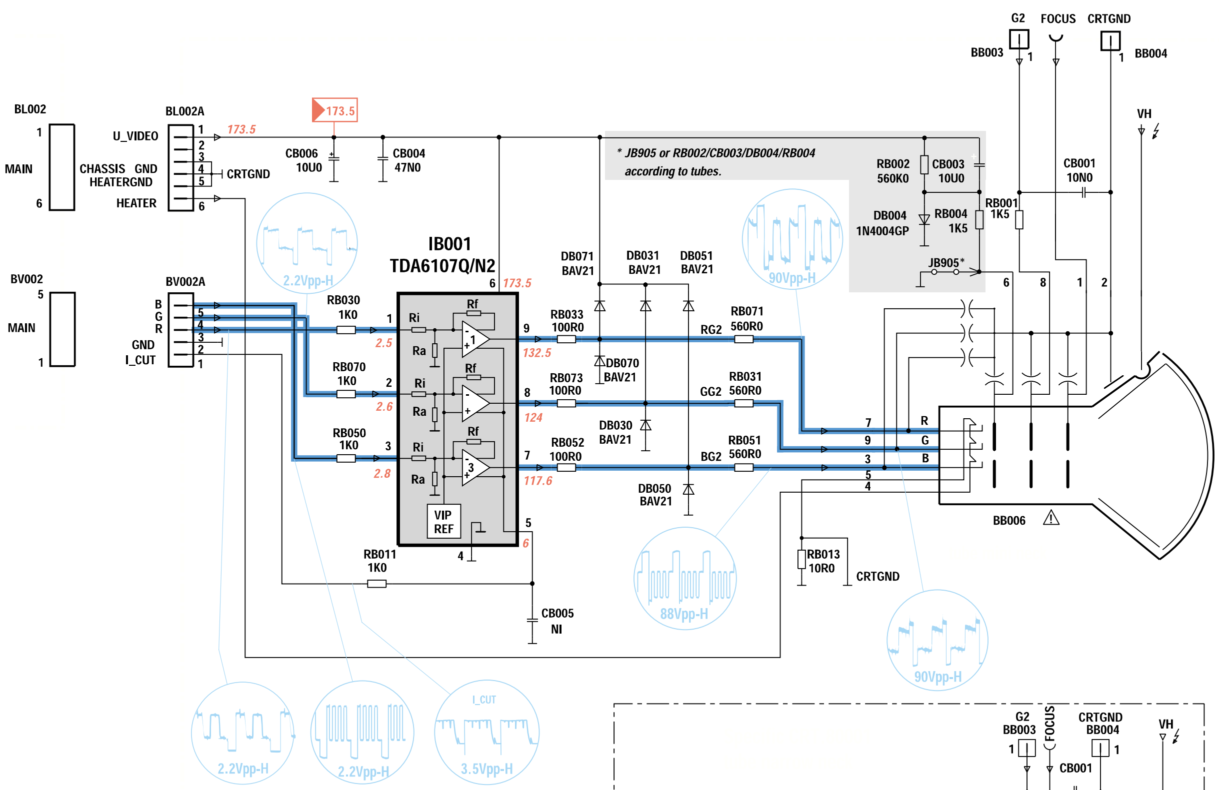

Safety Part
When repairing, use original part only
Piece de securite
N'utilisez que les pieces d'origine
Sicherheitsbauteil
Bei Ersatz nur Originalteil verwenden

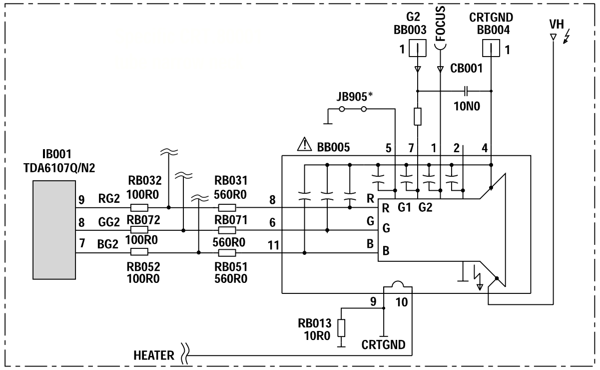

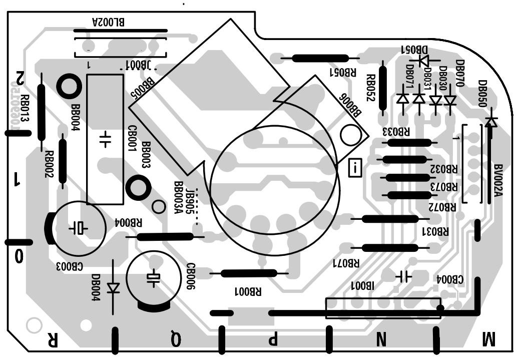

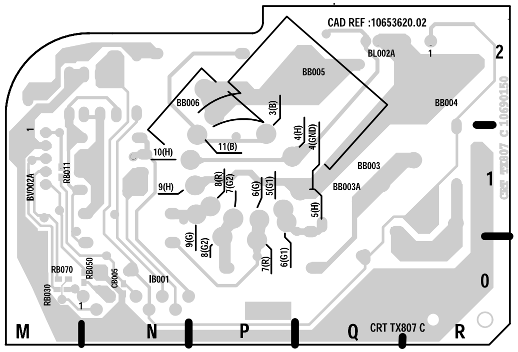

FRONT CONNECTOR BOARD - PRISES EN FACADE ET INTERCONNEXION DU CLAVIER - FRONT ANSCHLUSSPLATTE - PIASTRA CONNESSIONE FRONTALE - PLÁTINA MANDOS FRONTAL

FCB.80001.00

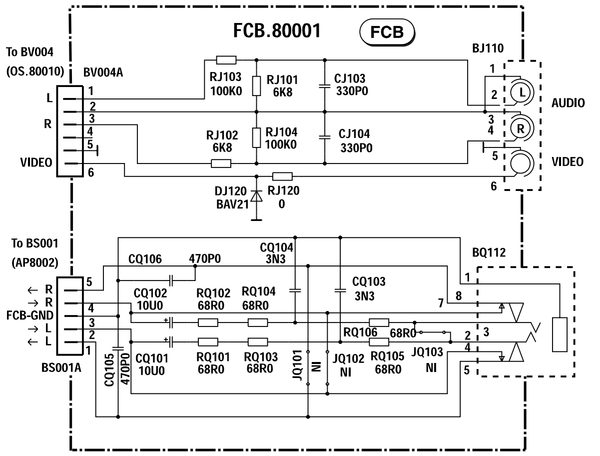

KDB.80001.00

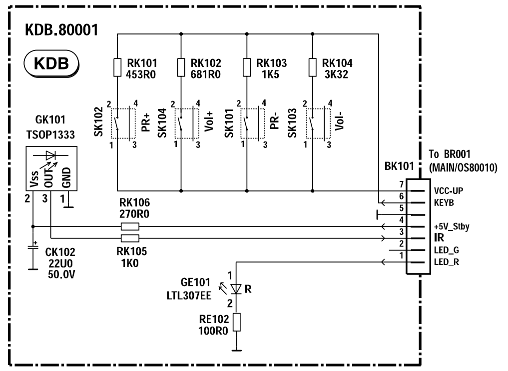

FCB.80001.00

KDB.80001.00

COMPONENT SIDE - COTE COMPOSANTS - BESTÜCKUNGSSEITE - LATO COMPONENTI - LADO COMPONENTES

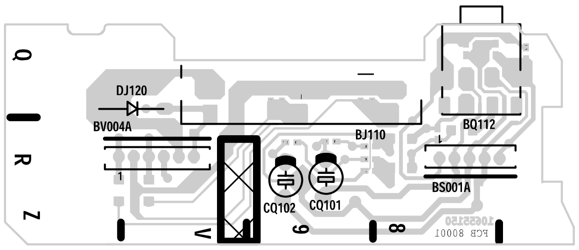

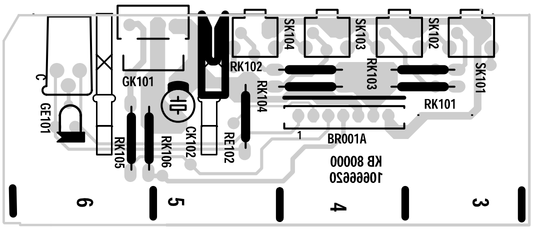

SOLDER SIDE - CÔTE SOUDURES - LÖTSEITE - LATO SALDATURE - LADO SOLDADURAS

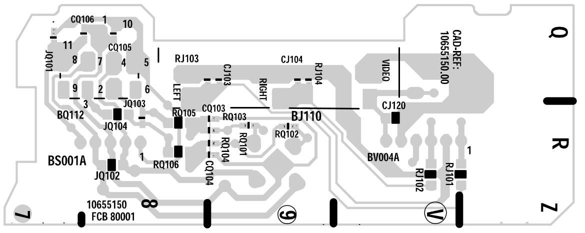

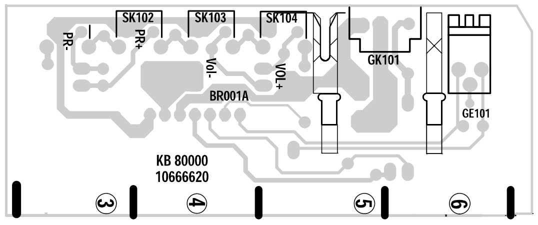

KEYBOARD MODULE - PLATINE CLAVIER - TASTATURPLATTE - PISATRA COMANDI - PLATINA TECLADO

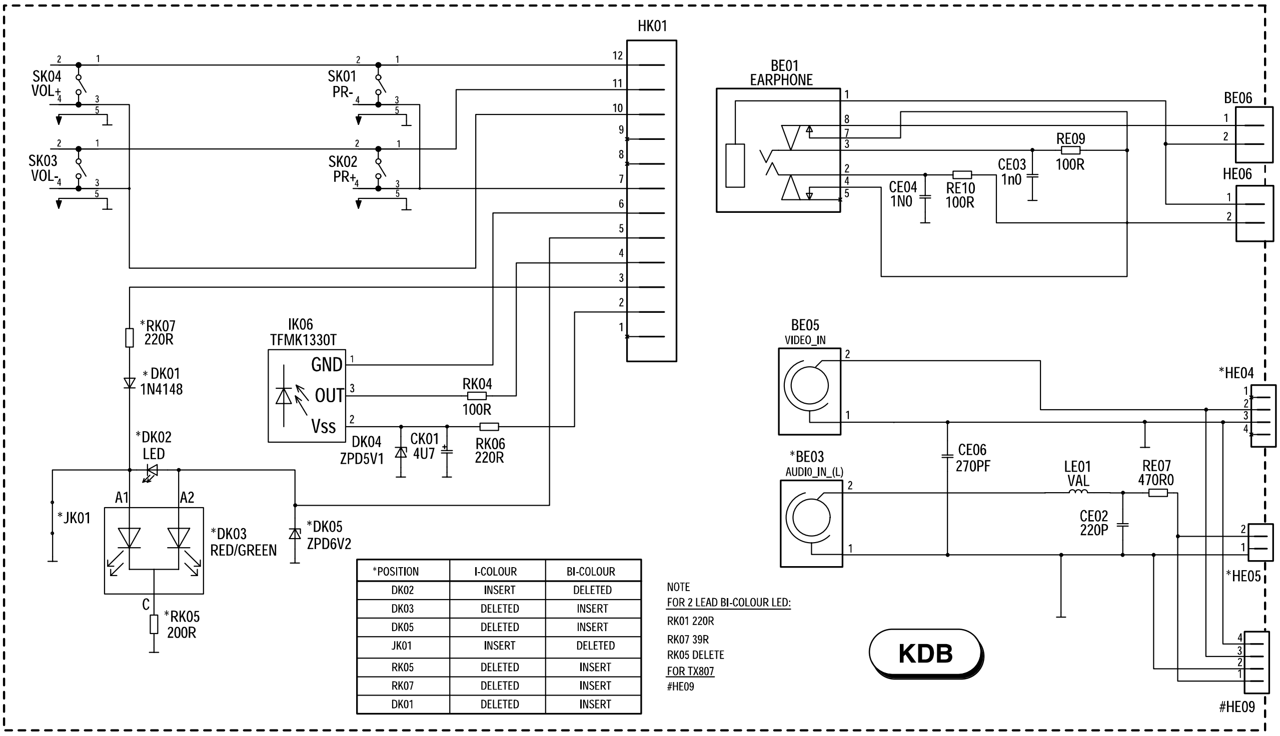

*POSITION	I-COLOUR	BI-COLOUR
DK02	INSERT	DELETED
DK03	DELETED	INSERT
DK05	DELETED	INSERT
JK01	INSERT	DELETED
RK05	DELETED	INSERT
RK07	DELETED	INSERT
DK01	DELETED	INSERT

NOTE
FOR 2 LEAD BI-COLOUR LED:
RK01 220R
RK07 39R
RK05 DELETE
FOR TX807
#HE09

SUB SATELLITE MODULE - SOUS MODULE SATELLITE - SUBMODUL SATELLIT
MODULO SATELLITE - MÓDULO SATELLITE

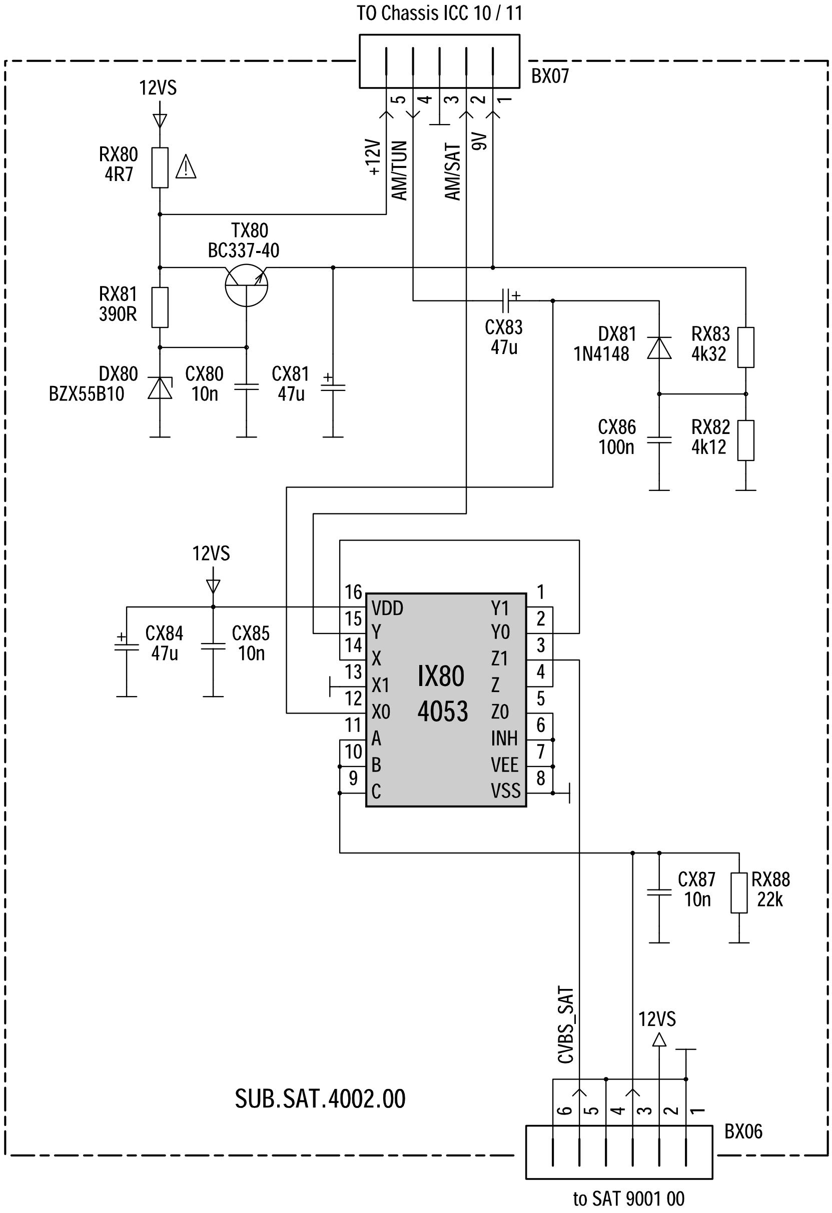

SUB SATELLITE MODULE - SOUS MODULE SATELLITE - SUBMODUL SATELLIT
MODULO SATELLITE - MÓDULO SATÉLITE

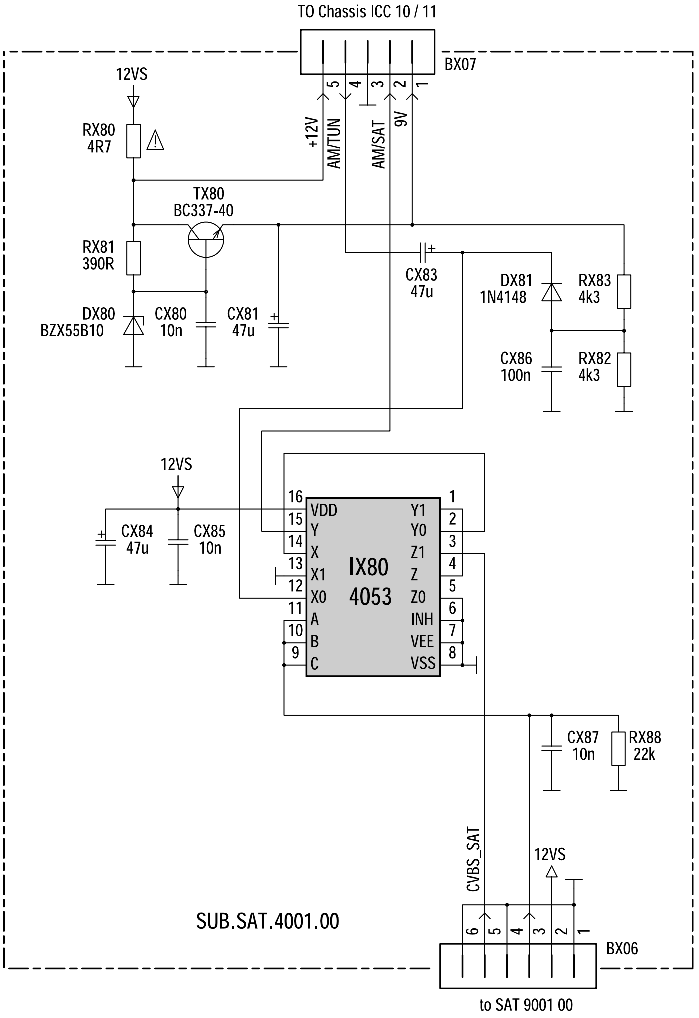

COMPONENT SIDE - COTE ELEMENTS
BESTÜCKUNGSSEITE
LATO COMPONENTI - LADO COMPONENTES

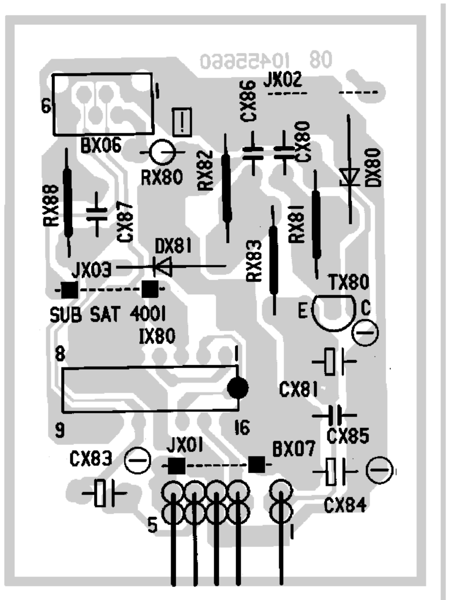

SOLDER SIDE - COTE CUIVRE
LÖTSEITE
LATO SALDATURE - LADO DEL COBRE

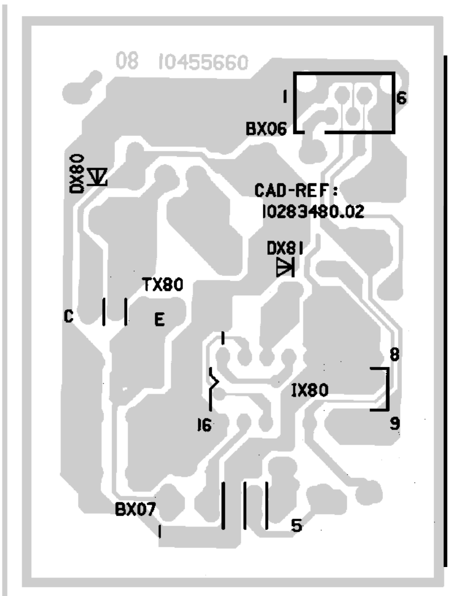

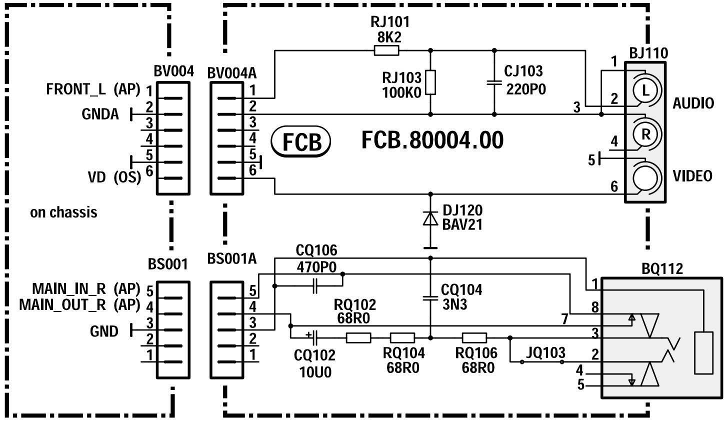
FRONT_L (AP)
GNDA
VD (OS)
on chassis
BV004
BV004A
RJ101
8K2
RJ103
100K0
CJ103
220P0
BJ110
AUDIO
VIDEO
FCB
FCB.80004.00
DJ120
BAV21
BS001
BS001A
MAIN_IN_R (AP)
MAIN_OUT_R (AP)
GND
CQ106
470P0
RQ102
68R0
CQ104
3N3
BQ112
CQ102
10U0
RQ104
68R0
RQ106
68R0
JQ103

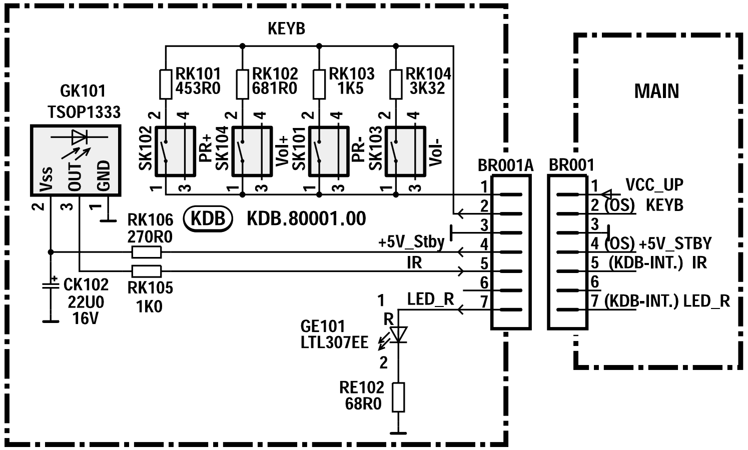
KEYB
MAIN
GK101
TSOP1333
Vss
OUT
GND
RK101
453R0
RK102
681R0
RK103
1K5
RK104
3K32
SK102
PR+
SK104
Vol+
SK101
PR-
SK103
Vol-
BR001A
BR001
VCC_UP
2 (OS) KEYB
4 (OS) +5V_STBY
5 (KDB-INT.) IR
7 (KDB-INT.) LED_R
RK106
270R0
KDB
KDB.80001.00
+5V_Stby
IR
LED_R
RK105
1K0
CK102
22U0
16V
GE101
LTL307EE
RE102
68R0

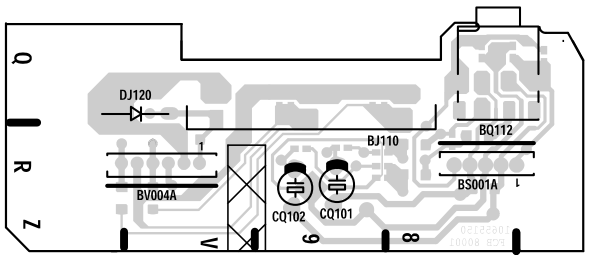
DJ120
BQ112
BJ110
BV004A
BS001A
CQ102
CQ101

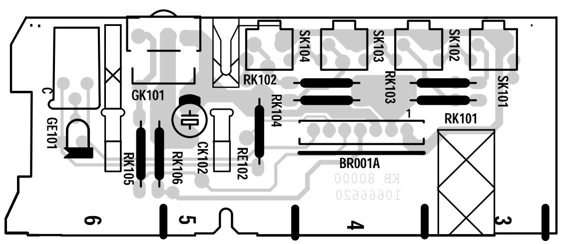
SK104
SK103
SK102
SK101
RK102
RK103
RK104
GK101
GE101
CK102
RE102
RK105
RK106
RK101
BR001A

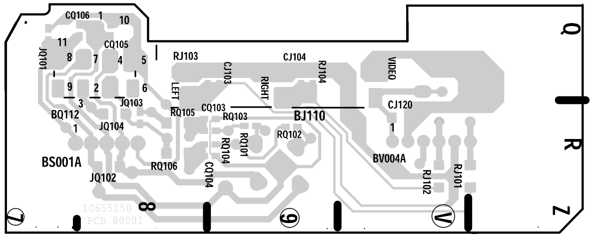
CQ106
CQ105
RJ103
CJ104
RJ104
VIDEO
BQ112
JQ103
RQ105
CQ103
RQ103
BJ110
CJ120
JQ104
RQ102
BS001A
RQ106
CQ104
BV004A
JQ102
RJ101
RJ102

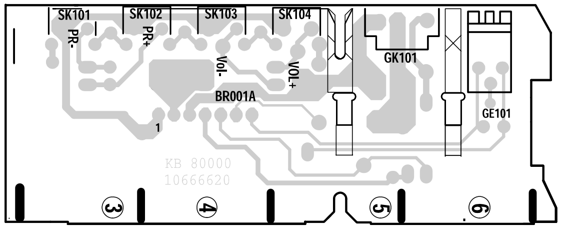
SK101
SK102
SK103
SK104
PR-
PR+
Vol-
Vol+
GK101
BR001A
GE101
KB 80000
10666620

FRONT CONNECTOR BOARD - PRISES EN FACADE ET INTERCONNEXION DU CLAVIER - FRONT ANSCHLUSSPLATTE - PIASTRA CONNESSIONE FRONTALE - PLÁTINA MANDOS FRONTAL

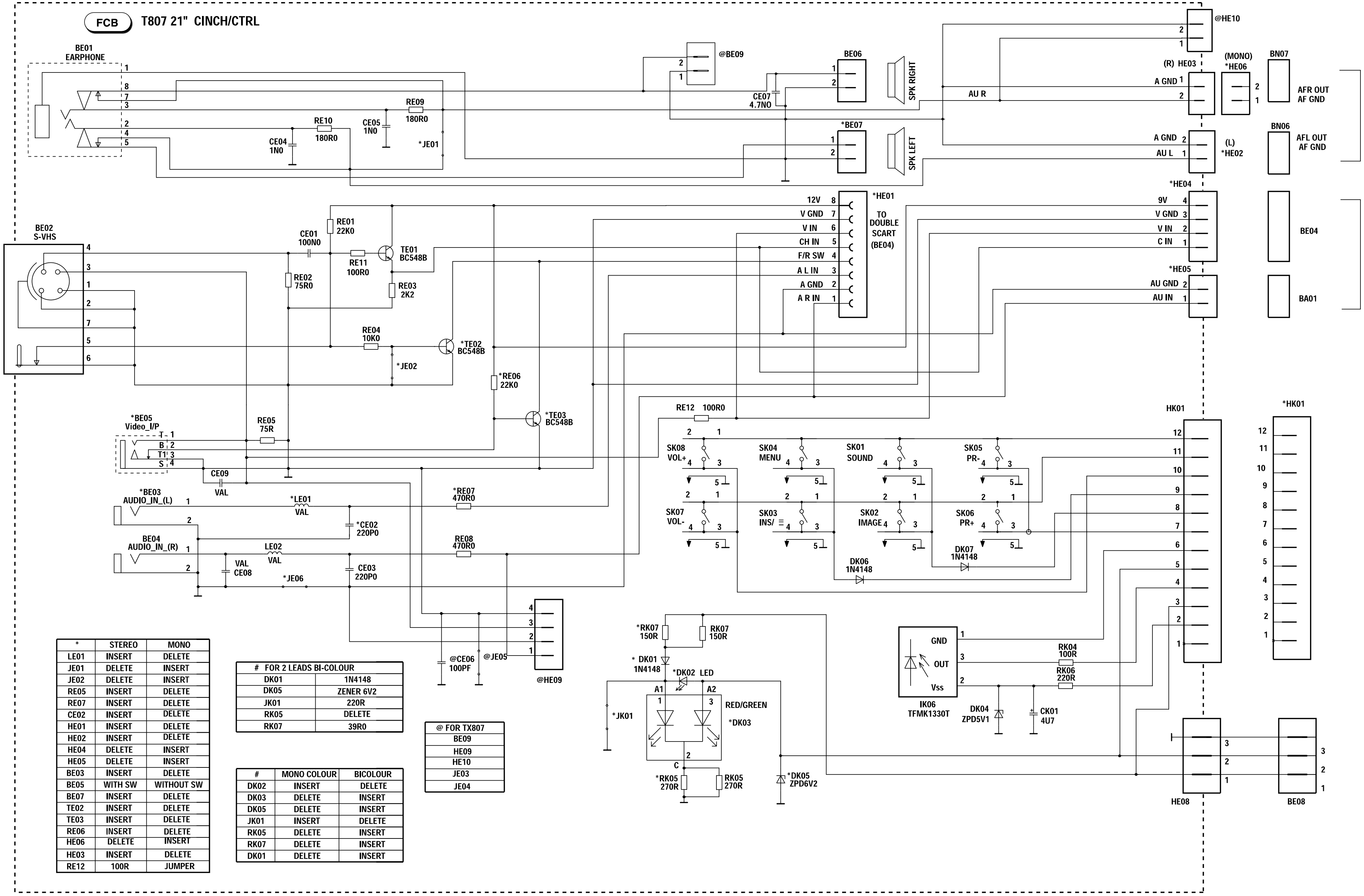

*	STEREO	MONO
LE01	INSERT	DELETE
JE01	DELETE	INSERT
JE02	DELETE	INSERT
RE05	INSERT	DELETE
RE07	INSERT	DELETE
CE02	INSERT	DELETE
HE01	INSERT	DELETE
HE02	INSERT	DELETE
HE04	DELETE	INSERT
HE05	DELETE	INSERT
BE03	INSERT	DELETE
BE05	WITH SW	WITHOUT SW
BE07	INSERT	DELETE
TE02	INSERT	DELETE
TE03	INSERT	DELETE
RE06	INSERT	DELETE
HE06	DELETE	INSERT
HE03	INSERT	DELETE
RE12	100R	JUMPER

# FOR 2 LEADS BI-COLOUR	
DK01	1N4148
DK05	ZENER 6V2
JK01	220R
RK05	DELETE
RK07	39R0

#	MONO COLOUR	BICOLOUR
DK02	INSERT	DELETE
DK03	DELETE	INSERT
DK05	DELETE	INSERT
JK01	INSERT	DELETE
RK05	DELETE	INSERT
RK07	DELETE	INSERT
DK01	DELETE	INSERT

@ FOR TX807
BE09
HE09
HE10
JE03
JE04

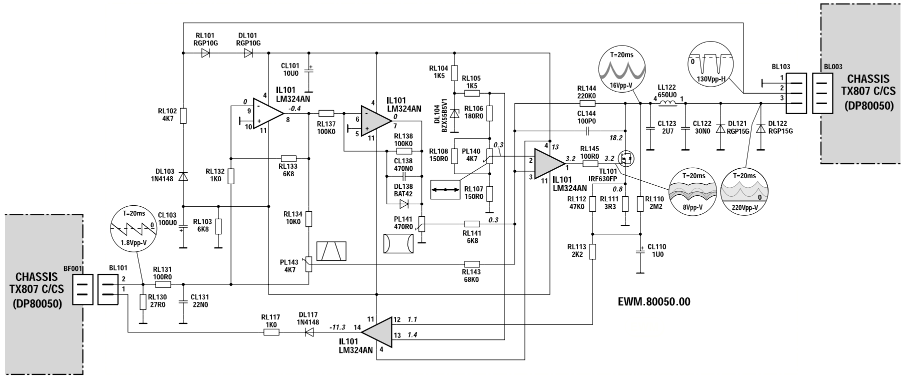

EWM.80050.00

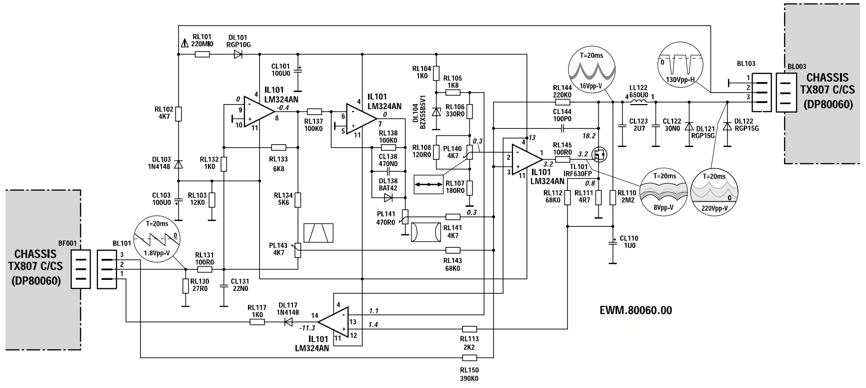

EWM.80060.00

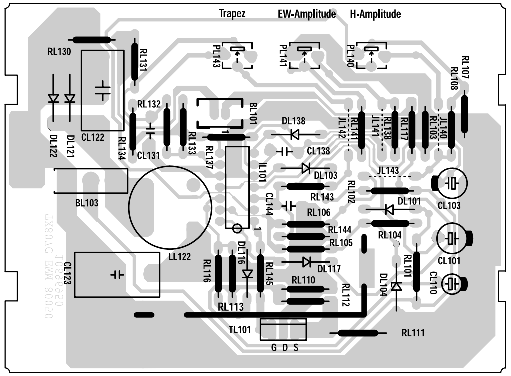

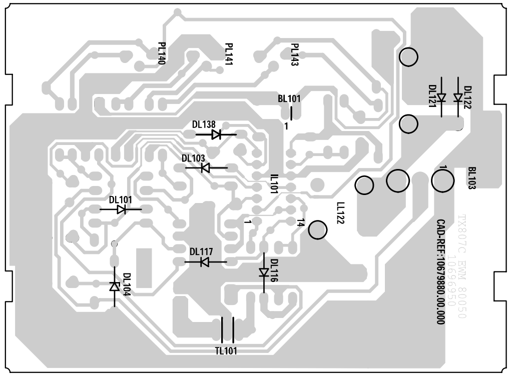

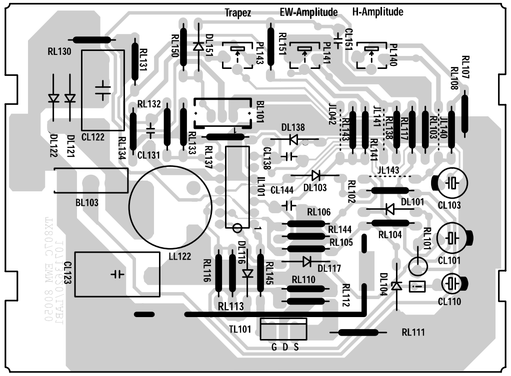

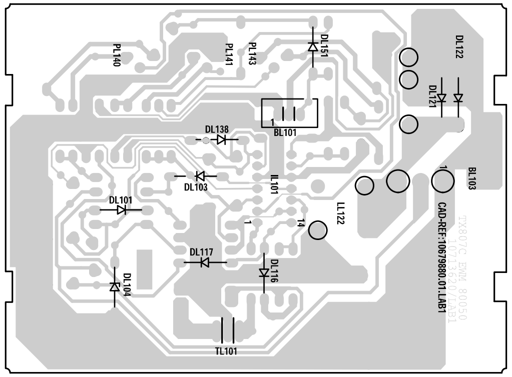

SUB SATELLITE MODULE - SOUS MODULE SATELLITE - SUBMODUL SATELLIT
MODULO SATELLITE - MÓDULO SATELLITE

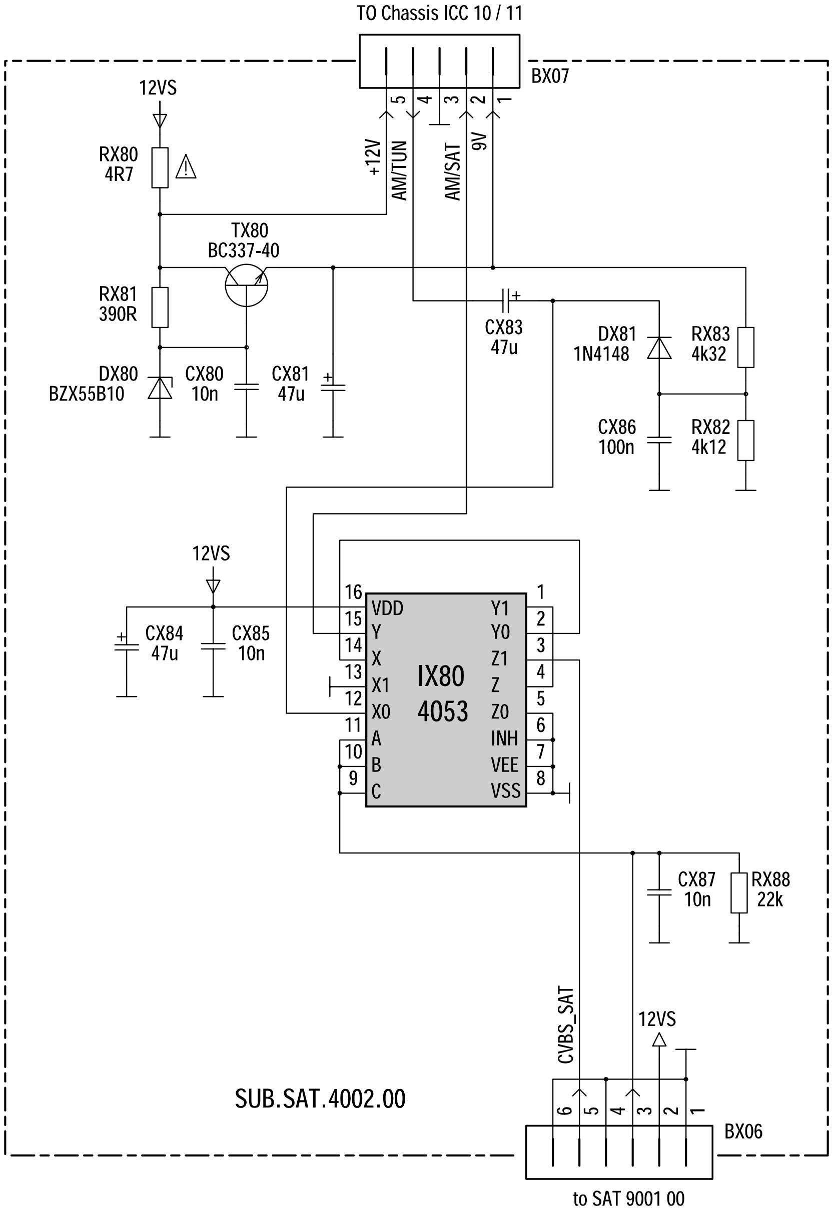

SUB SATELLITE MODULE - SOUS MODULE SATELLITE - SUBMODUL SATELLIT
MODULO SATELLITE - MÓDULO SATÉLITE

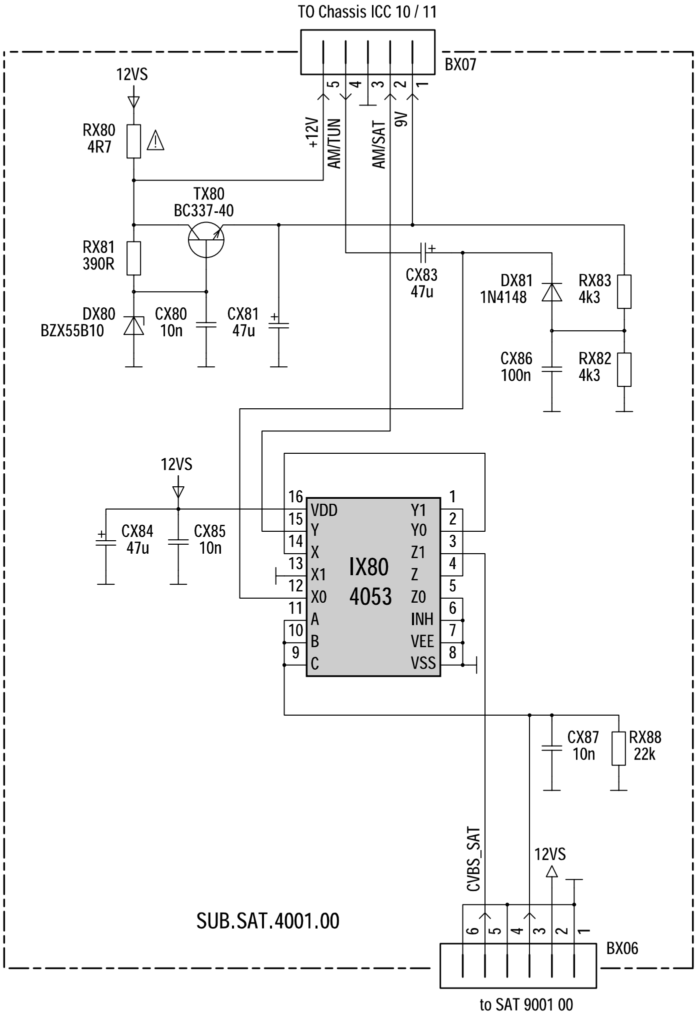

COMPONENT SIDE - COTE ELEMENTS
BESTÜCKUNGSSEITE
LATO COMPONENTI - LADO COMPONENTES

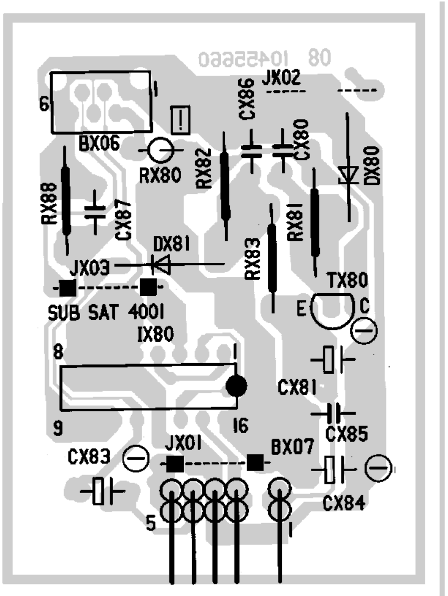

SOLDER SIDE - COTE CUIVRE
LÖTSEITE
LATO SALDATURE - LADO DEL COBRE

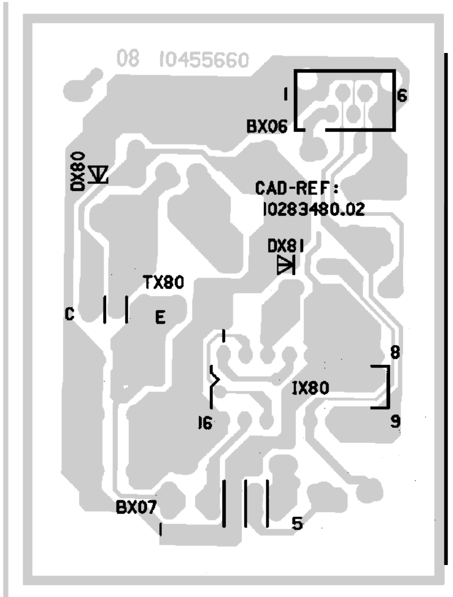

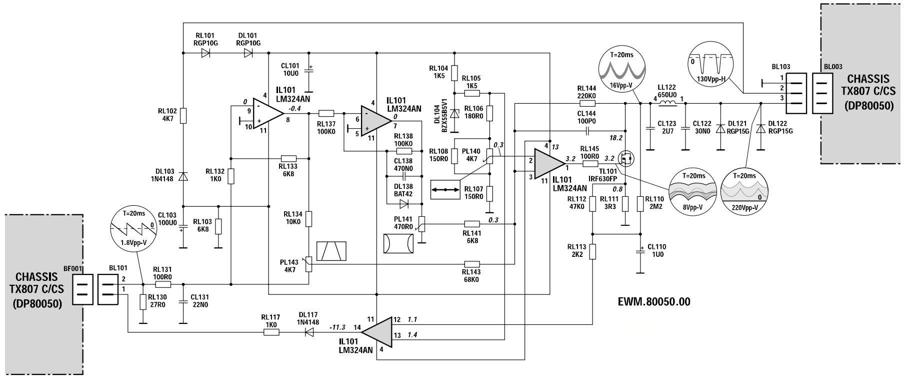
CHASSIS
TX807 C/CS
(DP80050)
IL101
LM324AN
TL101
IRF630FP
EWM.80050.00

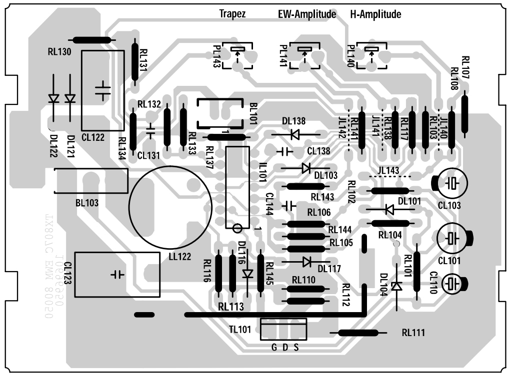
Trapez
EW-Amplitude
H-Amplitude

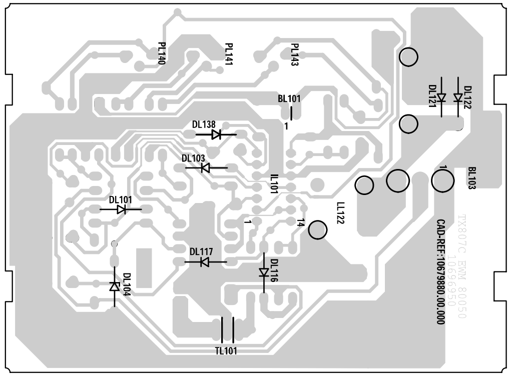
CAD-REF:10679880.00.000

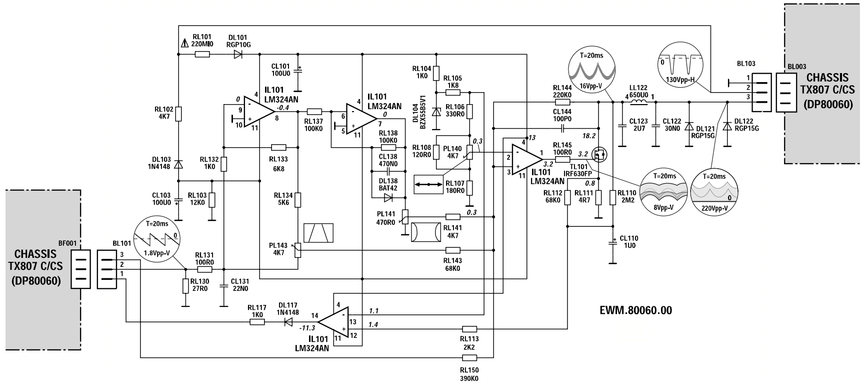
CHASSIS
TX807 C/CS
(DP80060)
IL101
LM324AN
TL101
IRF630FP
EWM.80060.00

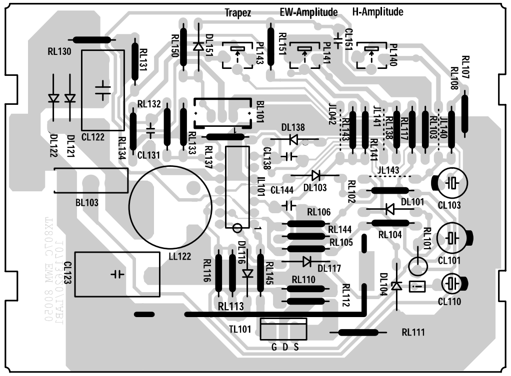
Trapez
EW-Amplitude
H-Amplitude

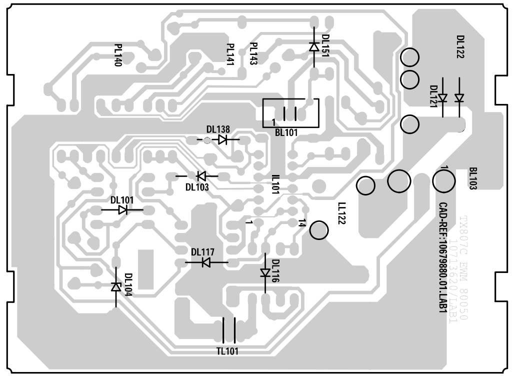
CAD-REF:10679880.01LAB1

SUB SATELLITE MODULE - SOUS MODULE SATELLITE - SUBMODUL SATELLIT
MODULO SATELLITE - MÓDULO SATELLITE

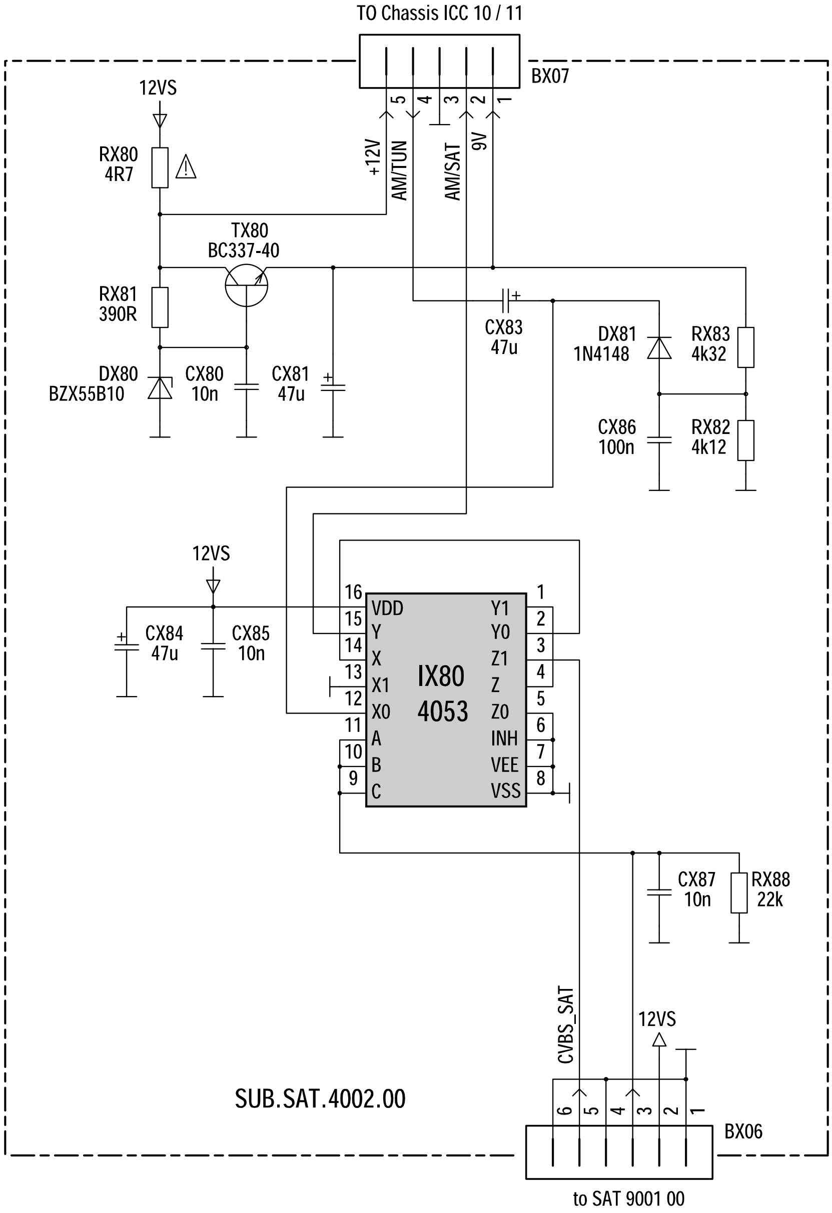

SUB SATELLITE MODULE - SOUS MODULE SATELLITE - SUBMODUL SATELLIT
MODULO SATELLITE - MÓDULO SATÉLITE

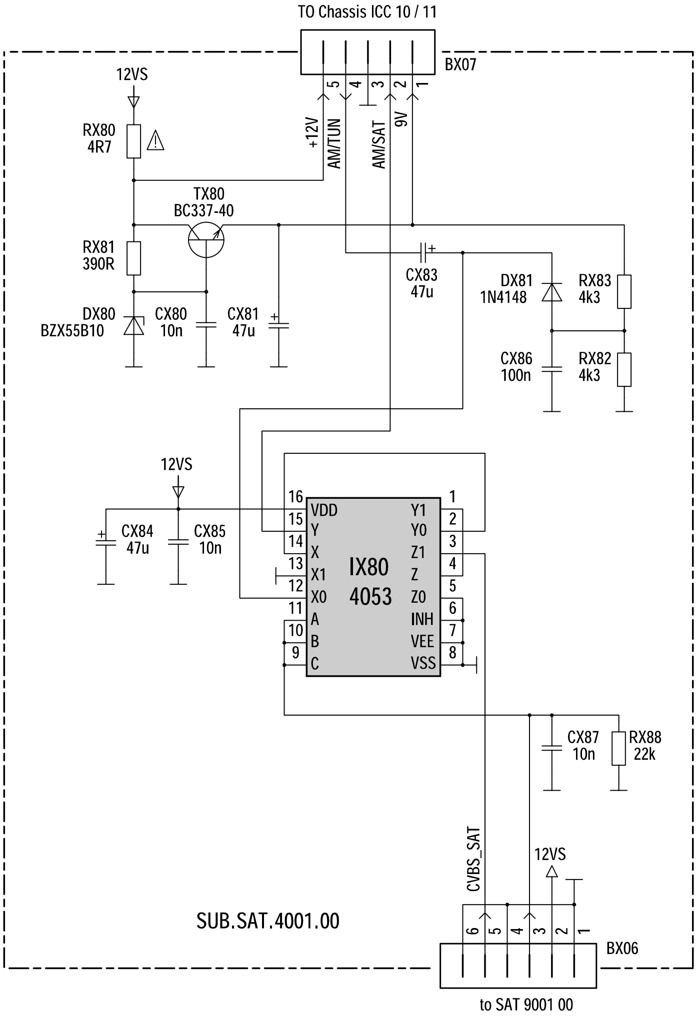

COMPONENT SIDE - COTE ELEMENTS
BESTÜCKUNGSSEITE
LATO COMPONENTI - LADO COMPONENTES

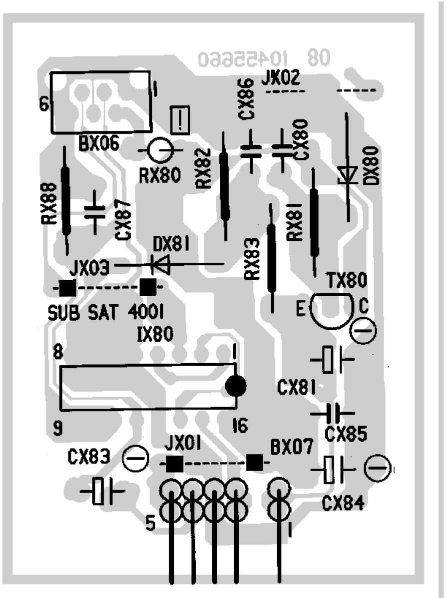

SOLDER SIDE - COTE CUIVRE
LÖTSEITE
LATO SALDATURE - LADO DEL COBRE

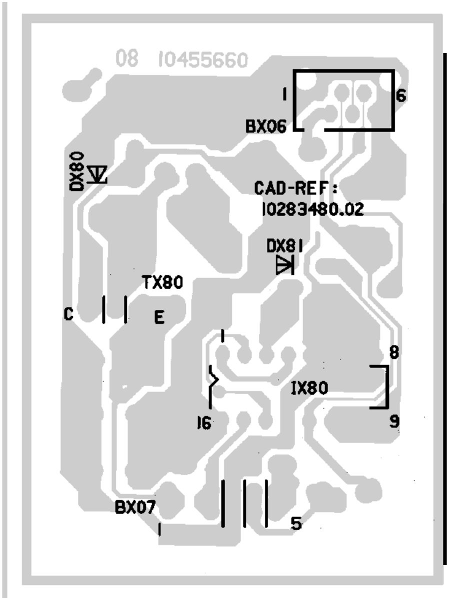

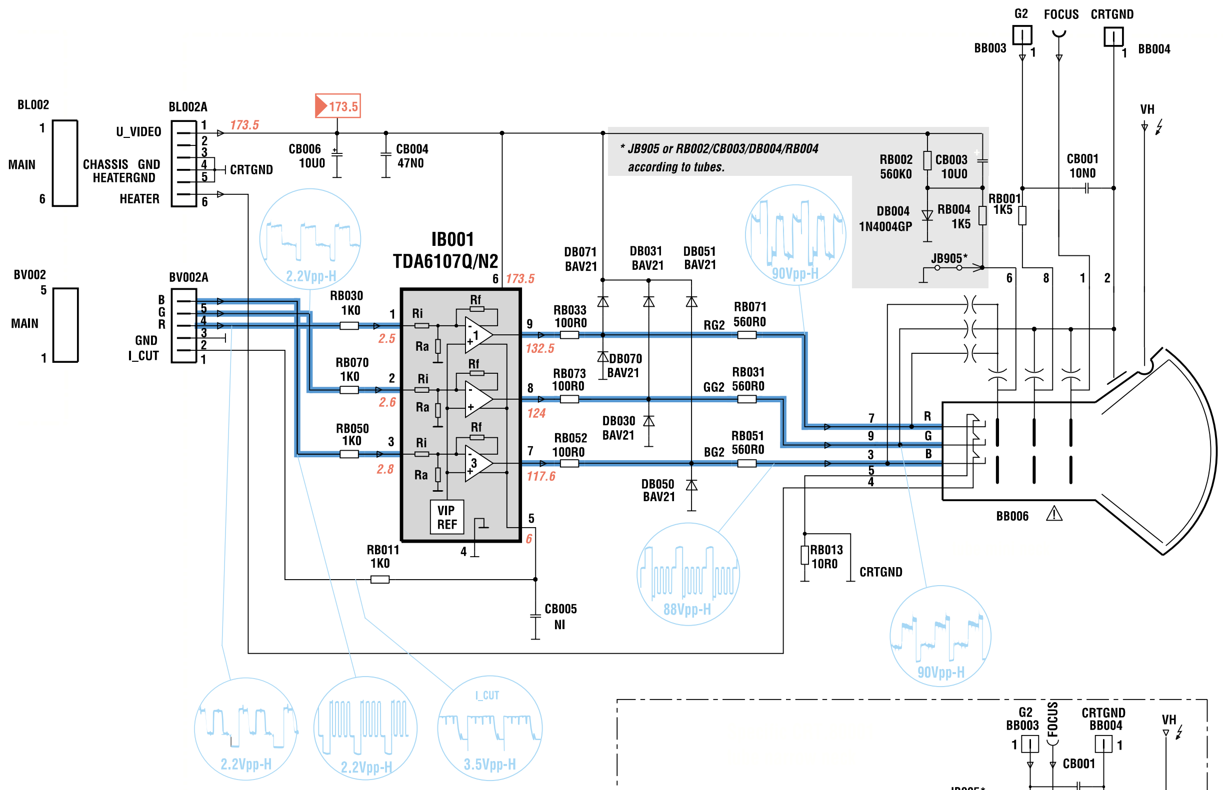

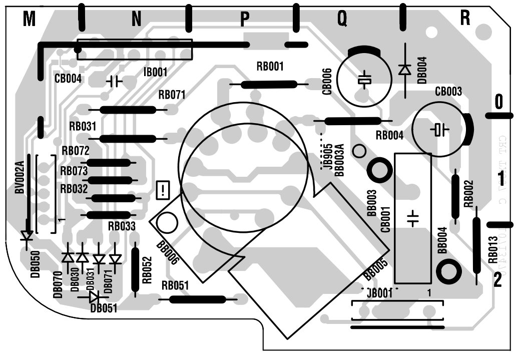

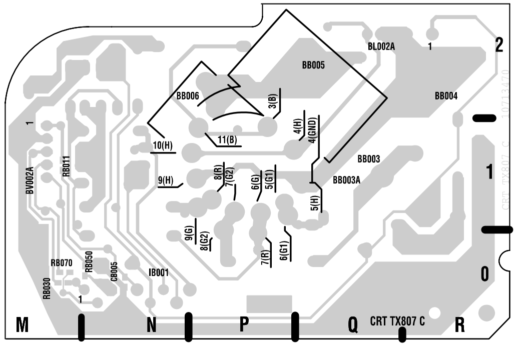

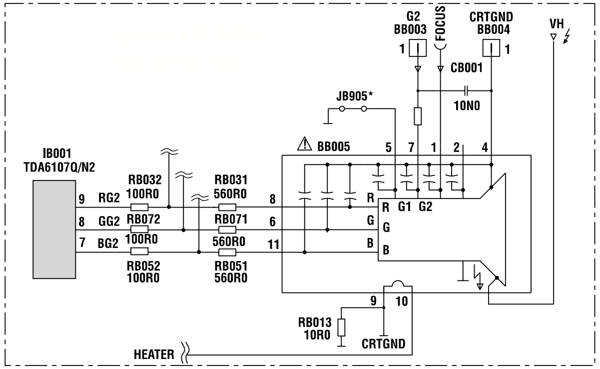

Safety Part
When repairing, use original part only

Piece de securite
N'utilisez que les pieces d'origine

Sicherheitsbauteil
Bei Ersatz nur Originalteil verwenden

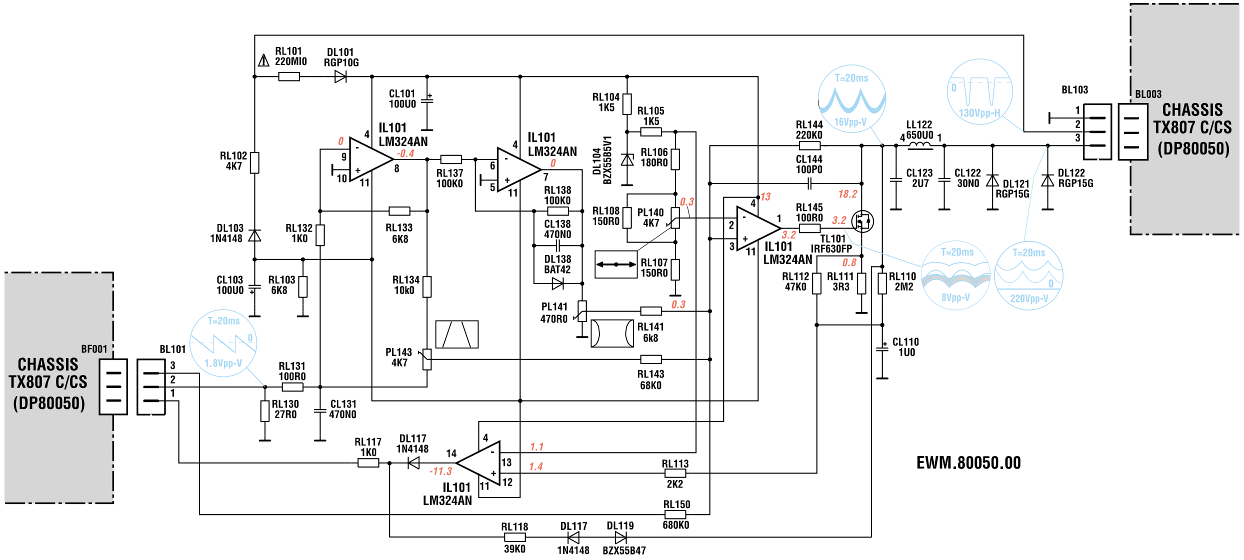
CHASSIS
TX807 C/CS
(DP80050)
BF001
BL101
IL101
LM324AN
TL101
IRF630FP
LL122
650U0
BL103
BL003
CHASSIS
TX807 C/CS
(DP80050)
EWM.80050.00

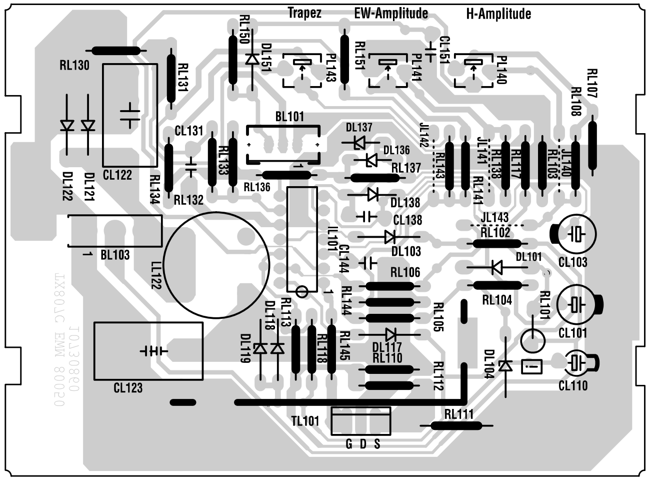
Trapez
EW-Amplitude
H-Amplitude
TL101
G D S

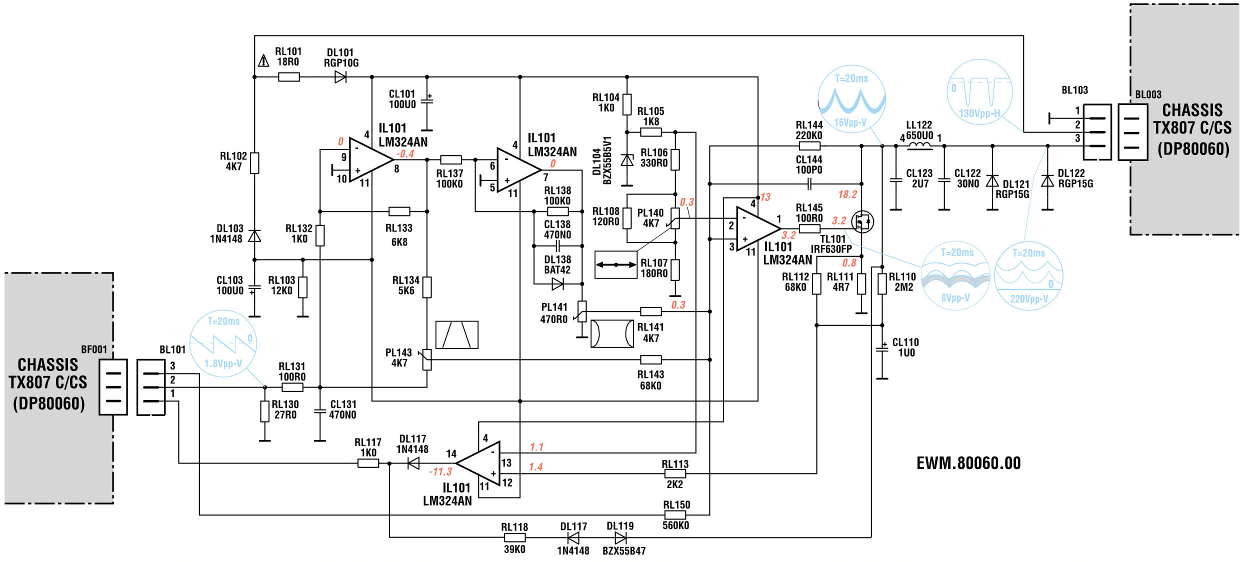
CHASSIS
TX807 C/CS
(DP80060)
BF001
BL101
IL101
LM324AN
TL101
IRF630FP
LL122
650U0
BL103
BL003
CHASSIS
TX807 C/CS
(DP80060)
EWM.80060.00

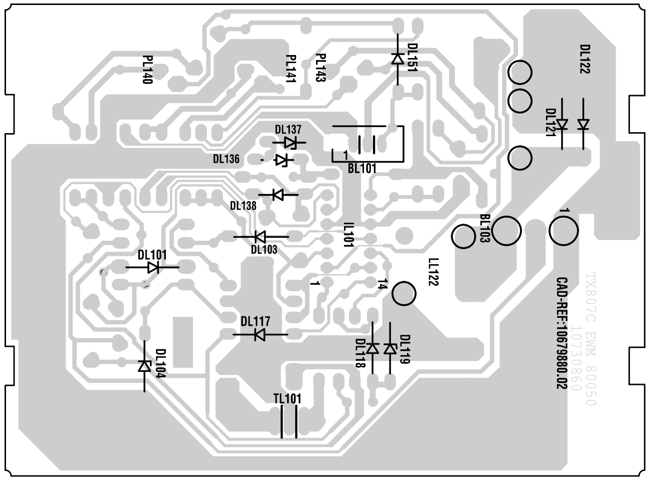
CAD-REF:10679880.02

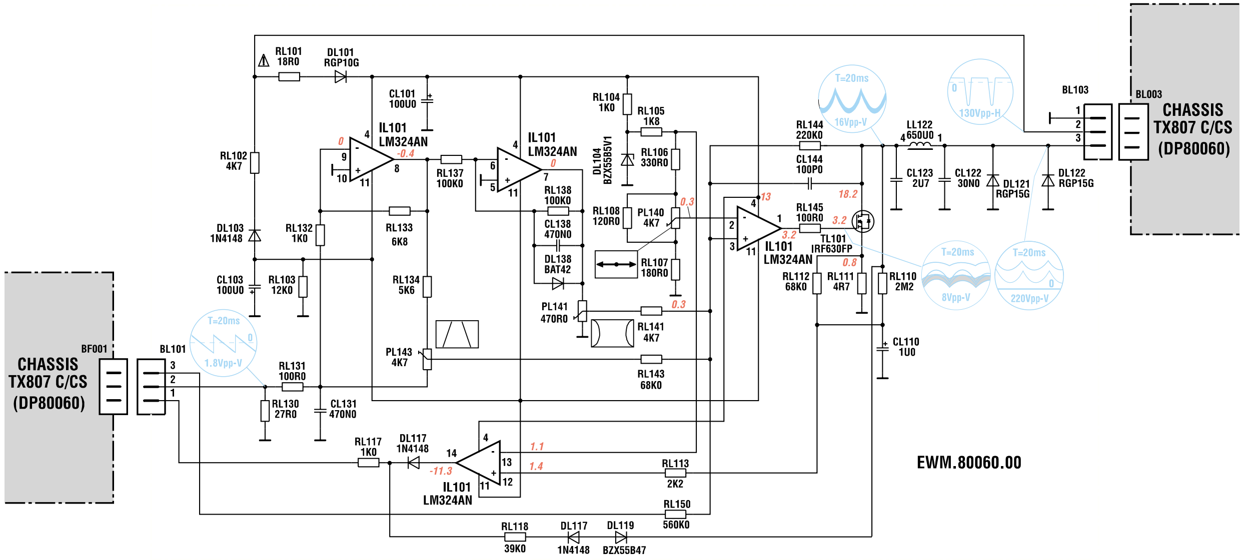

EWM.80060.00

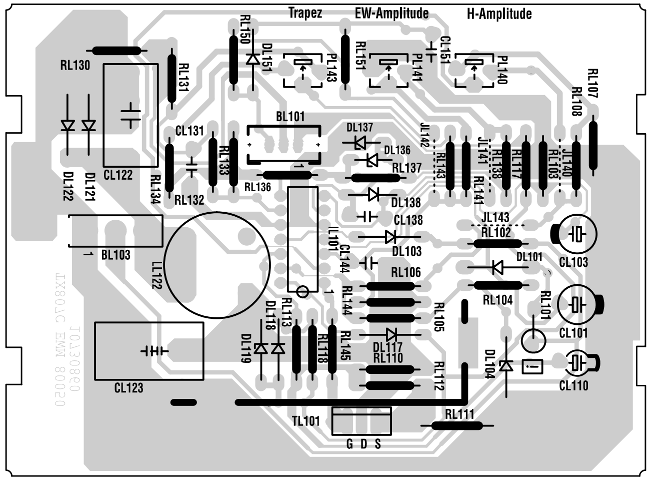

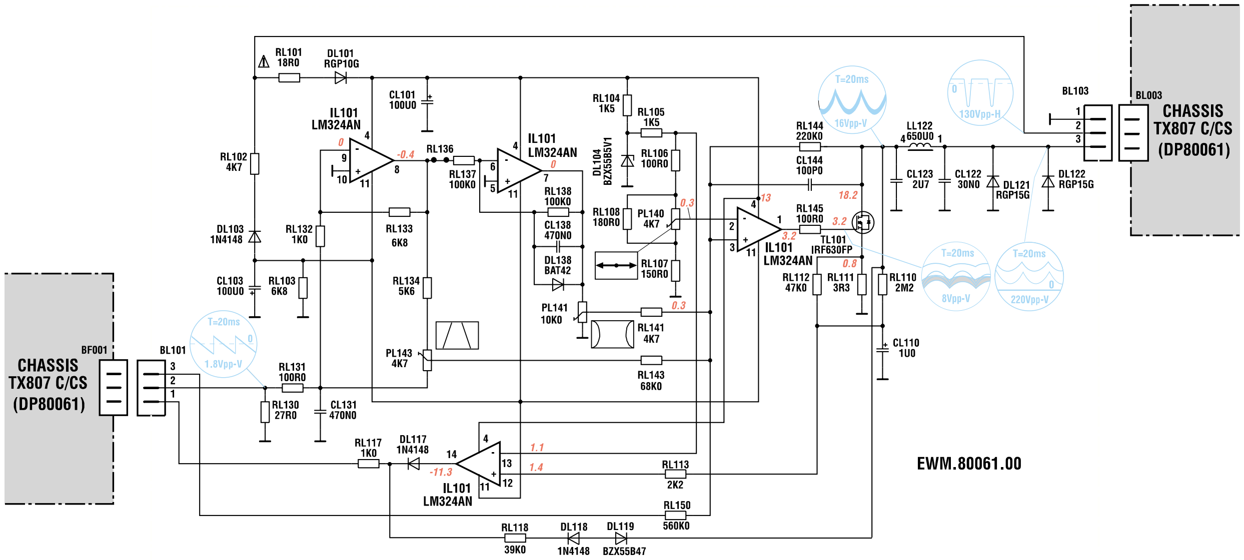

EWM.80061.00

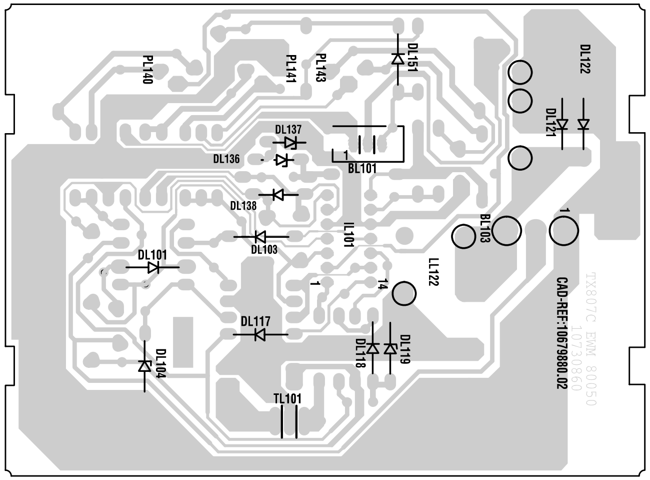

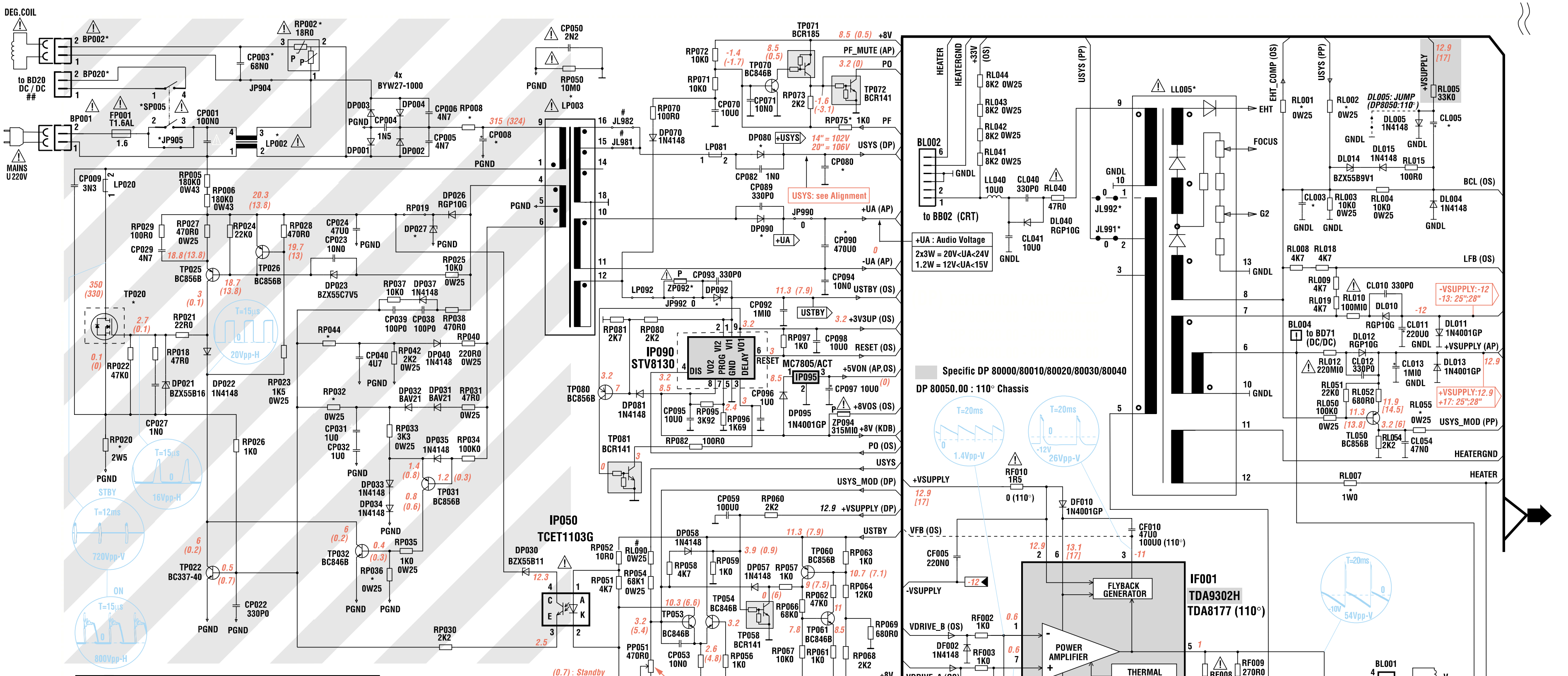

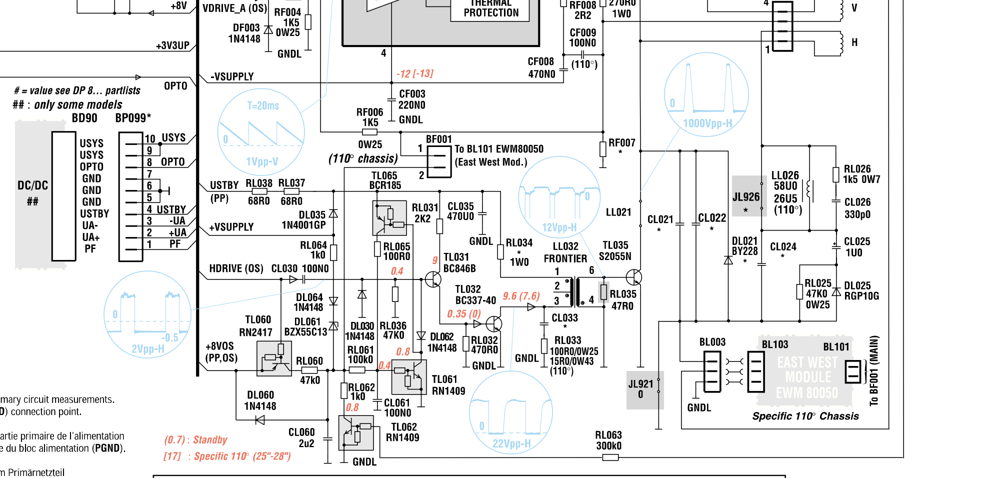

*	PP 80000 PP 80002	PP 80001	PP 80003	PP 80005	PP 80007
BP002	X	X	X	X	-
BP20/99	-	-	-	-	X
CP003	X	X	X	X	-
CP008	68U0	100U0	100U0	150U0	68U0
CP080	100U0	100U0	100U0	220U0	100U0
CP090	16.0V	25.0V	25.0V	25.0V	16.0V
DP027	BZX55B27	BZX55B27	BZX55B27	BZX55B30	BZX55B27
DP080	MUR160	MUR160	MUR160	MUR460	MUR160
DP090	RGP10G	MUR120	MUR120	RGP10G	RGP10G
DP092	MUR120	MUR120	MUR120	EGP10D	EGP10D
JP905	-	-	X	X	-
JP992	X	-	-	-	X
LP002	60M0	60M0	60M0	25M0	12M0
LP003	10658360	10656090	10656090	10693580	10658630
RP002	X	X	X	X	-
RP008	5R1/2.5W	5R1/2.5W	5R1/2.5W	4R7/3W	5R1/2.5W
RP020	1R0	1R0	1R0	680MI0	1R0
RP032	33K0	33K0	33K0	27K0	33K0
RP036	2K2	2K2	2K2	1K8	2K2
RP044	12K0	10K0	10K0	7K5	12K0
RP075	X	-	-	-	X
SP005	X	-	-	X	X
TP020	STP3NB90FP	STP3NB90FP	STP3NB90FP	STP3NB90FP	STP3NB90FP
ZP092	-	MP315	MP315	MP315	-

X : Inserted **-** : Not inserted

* Models without SP005

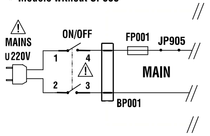

*	CL003	CL005	CL021	CL022	CL024	CL033	DL021	LL005	RF007	RF010	RL001	RL002	RL007	RL034	RL055	JL926	JL991	JL992
DP 80000 90° 4/3 10" Mini Neck	10N	4U7	6N6	330P	390N0	22N0	-	10658460	1R82	1R5	82K0	120K0	2R2 0.43W	47R0 1W0	68K0	X	-	X
DP 80010 90° 4/3 14" Mini Neck	10N	4U7	6N6	330P	440N0	22N0	-	10658340	1R82	1R5	82K0	100K0	2R2 1W0	39R0 1W0	68K0	X	-	X
DP 80020 90° 4/3 17" Mini Neck	10N	4U7	7N6	-	330N0	22N0	-	10658470	1R5	1R5	82K0	91K0	2R2 0.43W	33R0 1W0	68K0	X	X	-
DP 80030 90° 4/3 20" Narrow Neck	10N	4U7	7N6	-	440N0	22N0	-	10658470	1R5	1R5	82K0	82K0	1R0 1W0	33R0 1W0	68K0	X	-	X
DP 80040 90° 4/3 21" Narrow Neck	10N	4U7	8N3	-	440N0	22N0	-	10654690	1R21	1R5	91K0	91K0	1R0 1W0	27R0 1W0	68K0	-	-	X
DP 80050 110° 4/3 25" - 21"Narrow Neck	22N	2U2	14N6	-	440N0	100N0	X	10654690	1R21	0	220K0	91K0	1R0 1W0	10R0 0W43	220K0	-	-	X

⚠
Use isolating mains transformer
Utilise un transformateur isolateur du secteur
Einen Trenntrafo verwenden
Utilizar un transformador aislador de red
Utilizzare un transformatore per isolarvi dalla rete

Part of board connected to mains supply.
Partie du chassis reliée au secteur.
Primärseite des Netzteils.
Parte dello châssis collegata alla rete.
Parte del chasis conectada a la red.

(0.7) : Standby

= value see DP 8... partlists
: only some models

Note :
Power Supply primary circuit measurements.
- Use only (**PGND**) connection point.
Attention :
Mesure dans la partie primaire de l'alimentation
- Utiliser la masse du bloc alimentation (**PGND**).
Achtung :
Bei Messungen im Primärnetzteil
- Primärnetzteilmasse verwenden (**PGND**).
Attenzione :
misure nell'alimentatore primario
- usare massa alimentazione primario (**PGND**).
Cuidado :
Medida en el bloque de alimentacion
- Utilizar la masa del bloque de alimentacion (**PGND**).

(0.7) : Standby
[17] : Specific 110° (25"-28")

⚠ Indicates critical safety components, and identical components should be used for replacement. Only then can the operational safety be garanteed.

Le remplacement des éléments de sécurité (repérés avec le symbole ⚠ par des composants non homologués selon la Norme CEI 65 entraine la non-conformité de l'appareil. Dans ce cas, la responsabilité du fabricant n'est plus engagée.

Wenn Sicherheitsteile (mit dem Symbol ⚠ gekennzeichnet) durch nicht normgerechte Teile ersetzt werden, erlischt die Haftung des Herstellers.

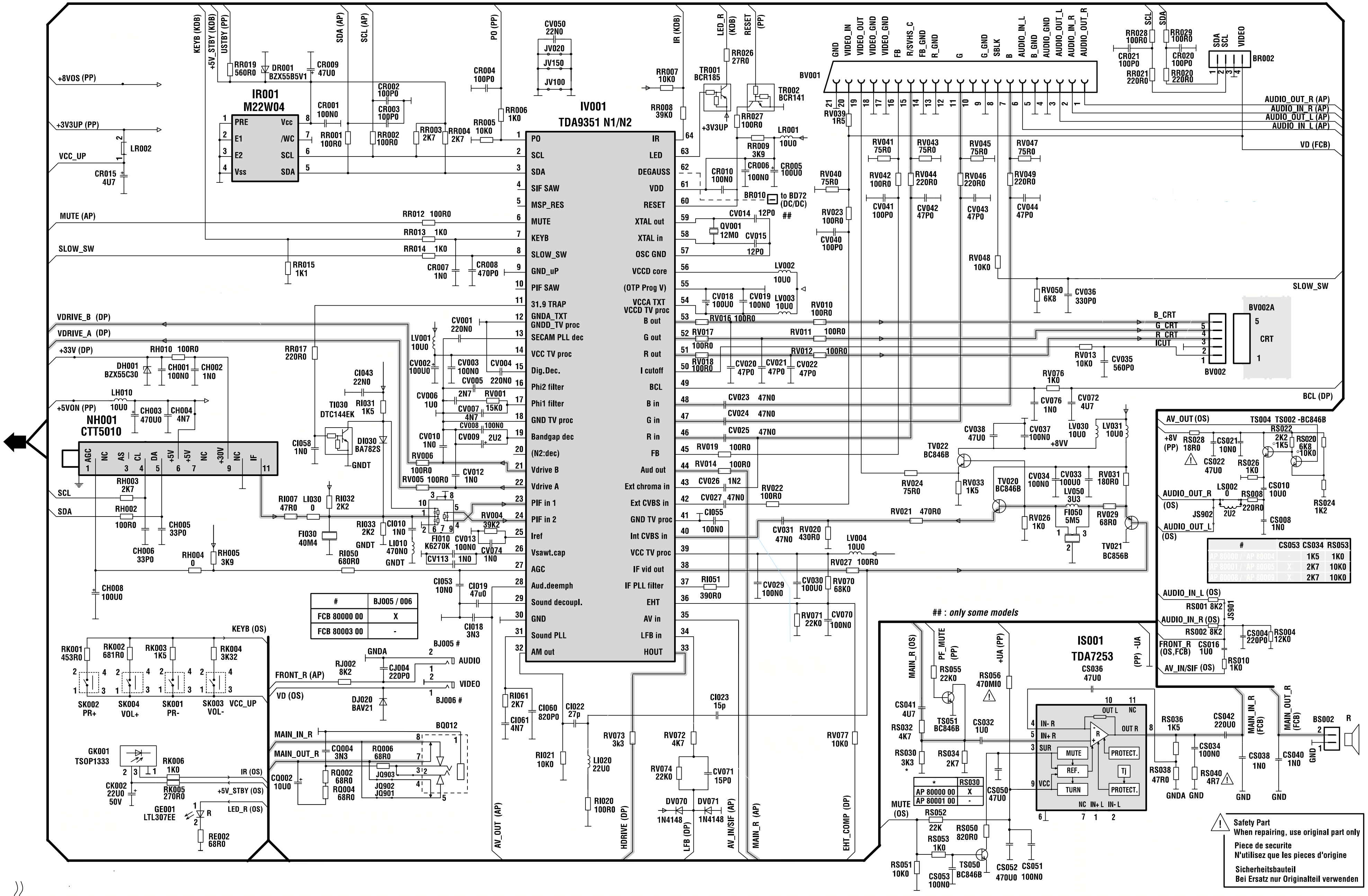
IV001
TDA9351 N1/N2
IR001
M22W04
NH001
CTT5010
IS001
TDA7253
TR001
BCR185
TR002
BCR141
BV001
BV002
BV002A
CRT
BR002
BQ012
GK001
TSOP1333
GE001
LTL307EE
+8VOS (PP)
+3V3UP (PP)
VCC_UP
MUTE (AP)
SLOW_SW
VDRIVE_B (DP)
VDRIVE_A (DP)
+33V (DP)
+5VON (PP)
SCL
SDA
KEYB (OS)
FRONT_R (AP)
VD (OS)
MAIN_IN_R
MAIN_OUT_R
AUDIO_OUT_R (AP)
AUDIO_IN_R (AP)
AUDIO_OUT_L (AP)
AUDIO_IN_L (AP)
VD (FCB)
BCL (DP)
AV_OUT (OS)
AUDIO_OUT_R (OS)
AUDIO_OUT_L (OS)
AUDIO_IN_L (OS)
AUDIO_IN_R (OS)
FRONT_R (OS,FCB)
AV_IN/SIF (OS)
MUTE (OS)
: only some models
#	BJ005 / 006
FCB 80000 00	X
FCB 80003 00	-
#	CS053	CS034	RS053
---	---	---	---
	-	1K5	1K0
	X	2K7	10K0
	X	2K7	10K0
*	RS030
AP 80000 00	X
AP 80001 00	-
Safety Part
When repairing, use original part only
Piece de securite
N'utilisez que les pieces d'origine
Sicherheitsbauteil
Bei Ersatz nur Originalteil verwenden

MAIN BOARD - PLATINE PRINCIPALE - CHASSIS GRUNDPLATTE - PIASTRA PRINCIPALE - PLATINA PRINCIPAL

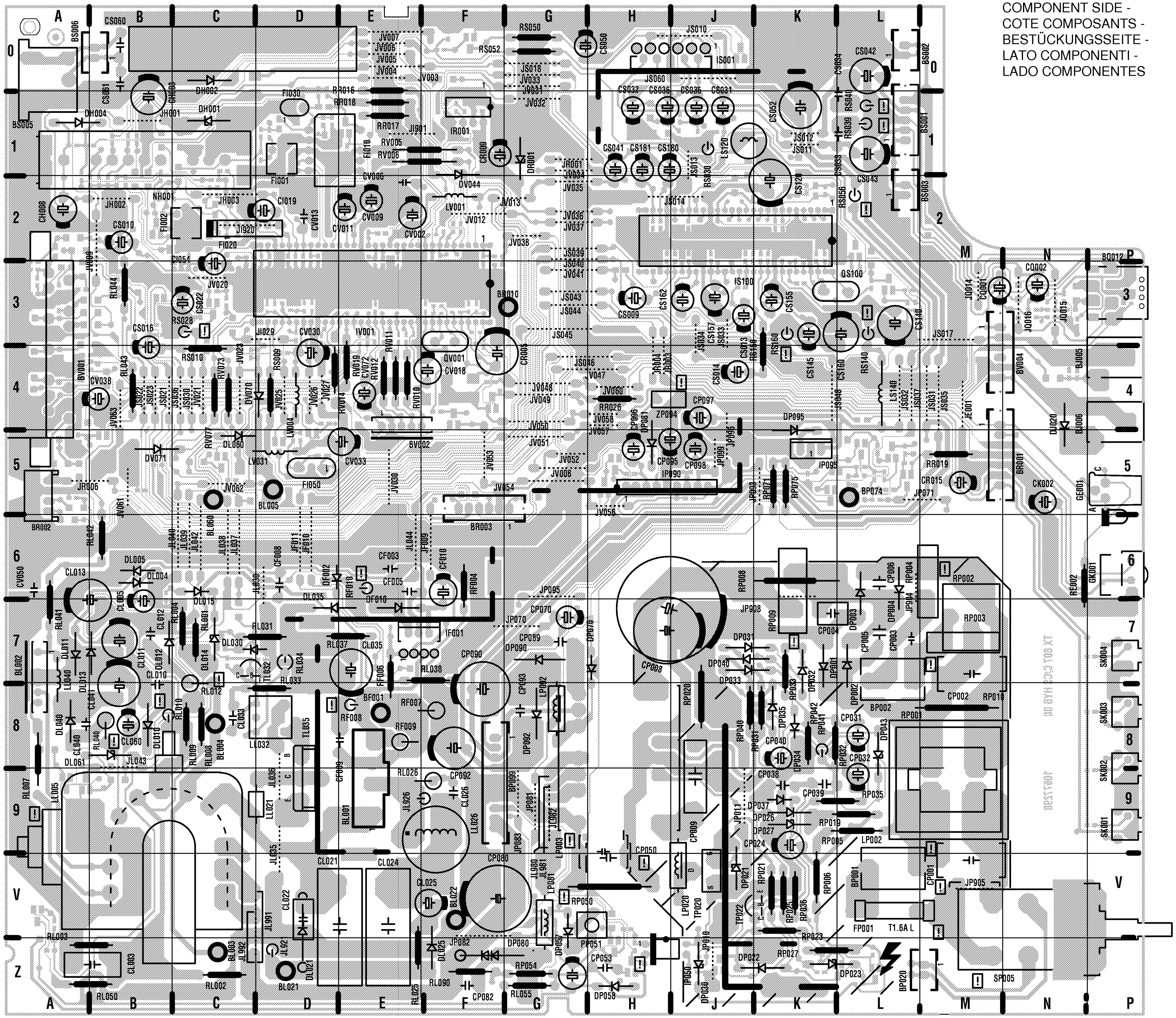

COMPONENT SIDE -
COTE COMPOSANTS -
BESTÜCKUNGSSEITE -
LATO COMPONENTI -
LADO COMPONENTES

MAIN BOARD - PLATINE PRINCIPALE - CHASSIS GRUNDPLATTE - PIASTRA PRINCIPALE - PLATINA PRINCIPAL

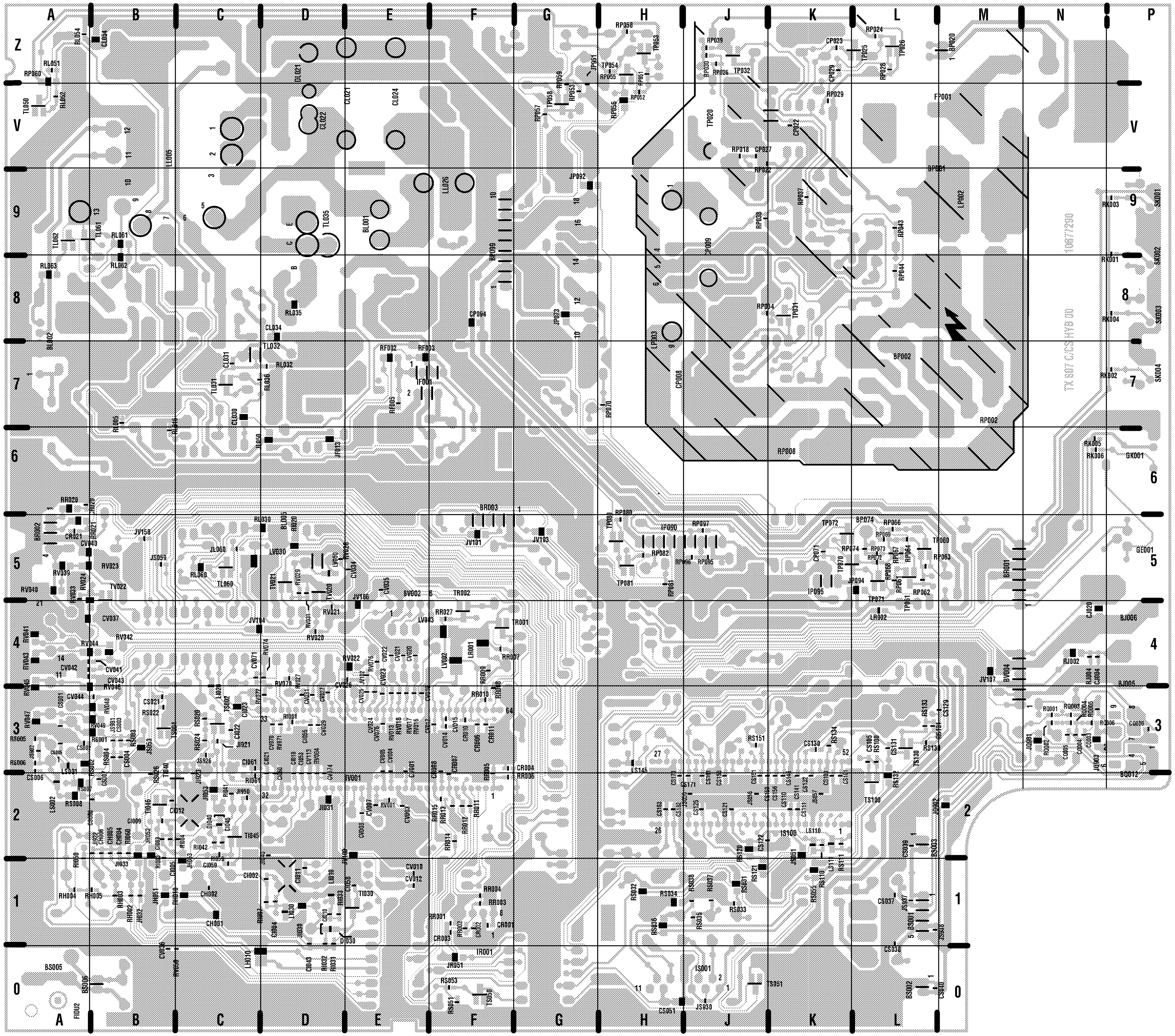

SOLDER SIDE -
CÔTE SOUDURES -
LÖTSEITE -
LATO SALDATURE -
LADO SOLDADURAS

MAIN BOARD - PLATINE PRINCIPALE - CHASSIS GRUNDPLATTE - PIASTRA PRINCIPALE - PLATINA PRINCIPAL

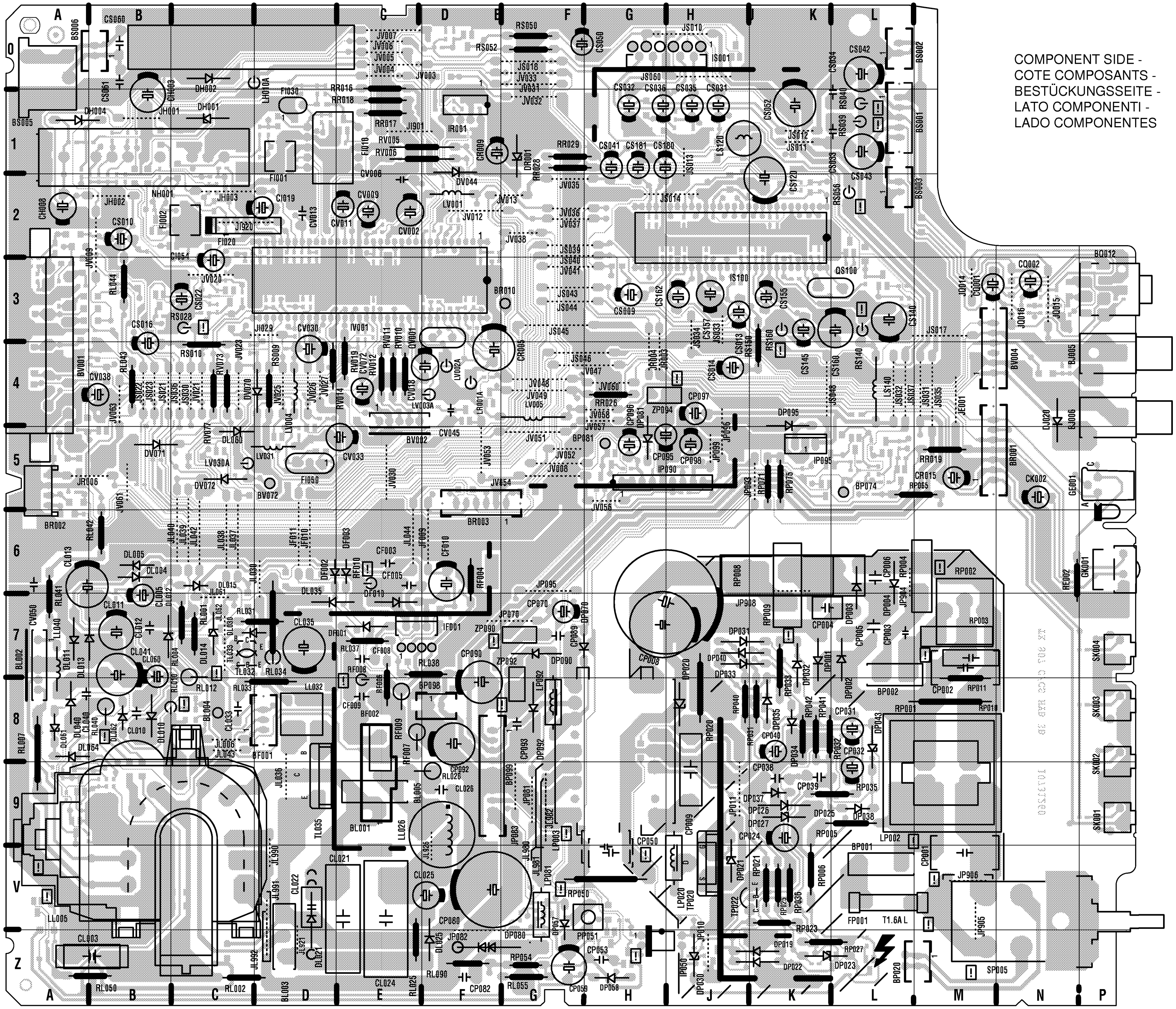

COMPONENT SIDE -
COTE COMPOSANTS -
BESTÜCKUNGSSEITE -
LATO COMPONENTI -
LADO COMPONENTES

TX807C/CS
Updated 10 / 01

MAIN BOARD - PLATINE PRINCIPALE - CHASSIS GRUNDPLATTE - PIASTRA PRINCIPALE - PLATINA PRINCIPAL

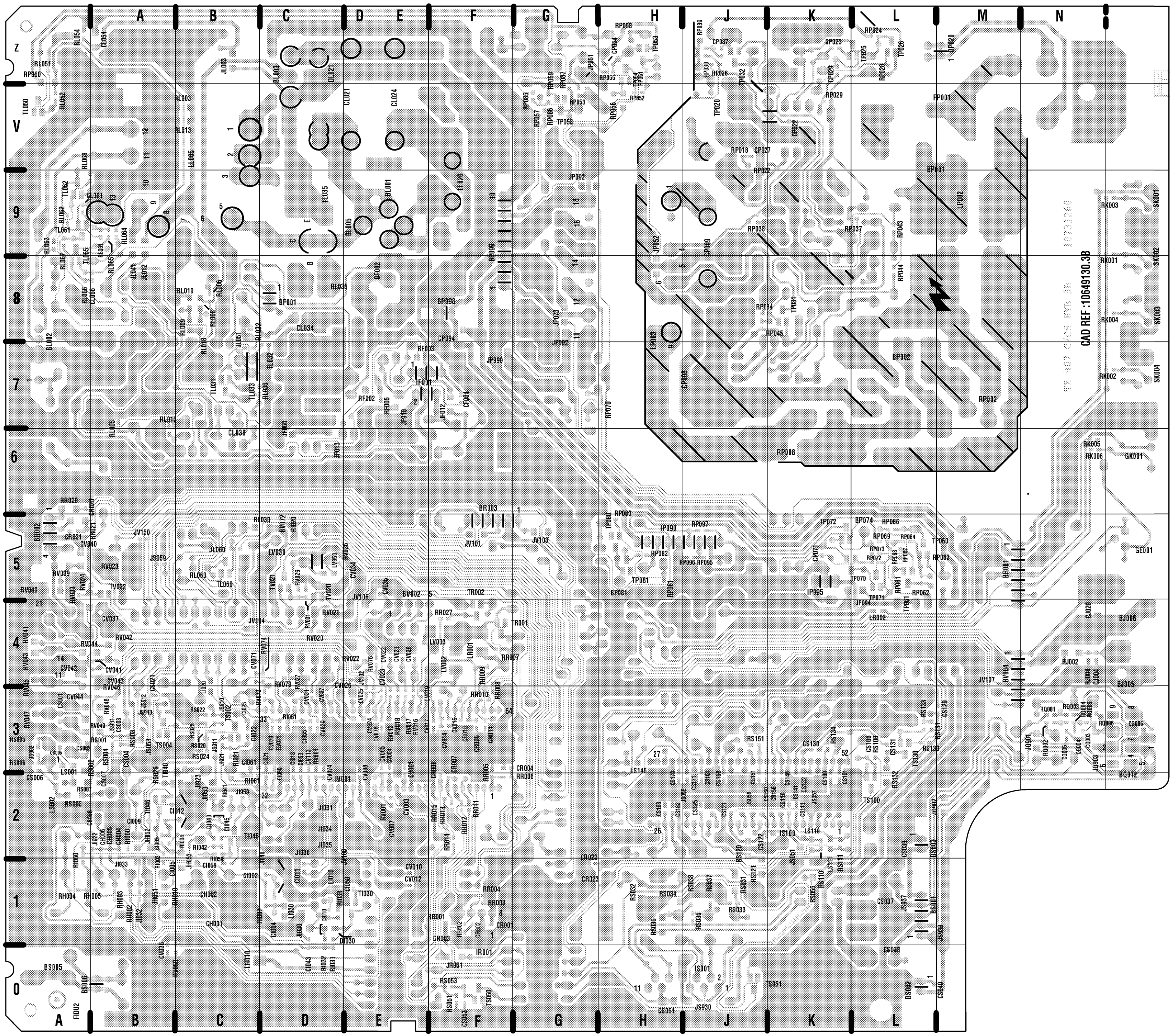

SOLDER SIDE -
CÔTE SOUDURES -
LÖTSEITE -
LATO SALDATURE -
LADO SOLDADURAS

TX807C/CS
Updated 10 / 01

VIDEO AMPLIFIER BOARD - PLATINE AMPLIFICATEURS VIDEO - VIDEOVERSTÄRKERPLATTE - PLATINA AMPLIFICADOR VIDEO - PIASTRA AMPLIFICATORE VIDEO

CRT 80000.00 - CRT 80001.00

COMPONENT SIDE - CÔTE COMPOSANTS - BESTÜCKUNGSSEITE - LATO COMPONENTI - LADO COMPONENTES

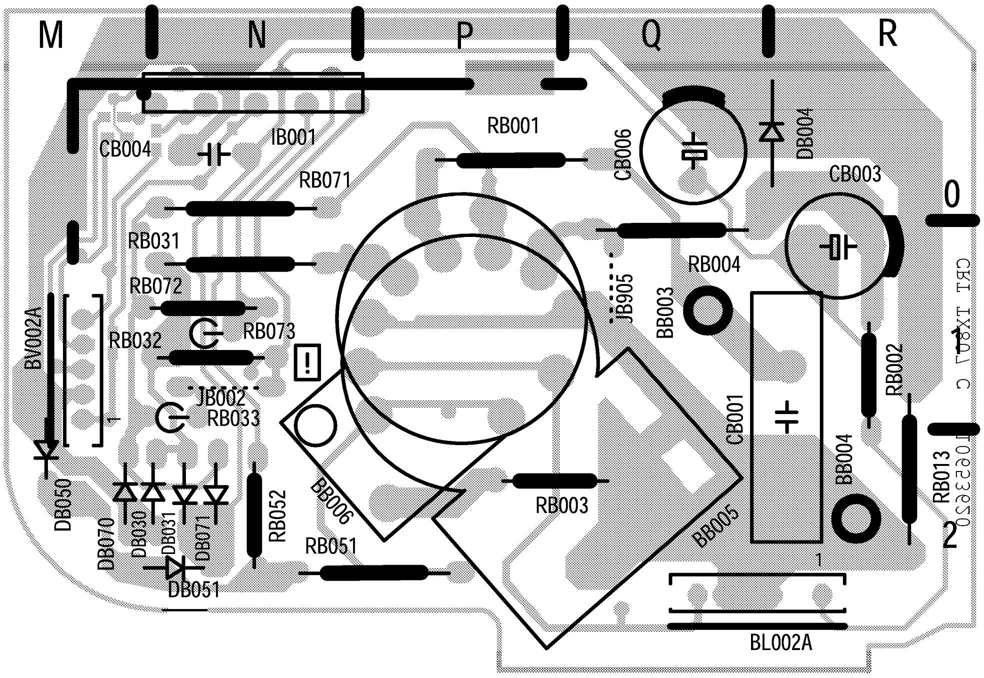

SOLDER SIDE - CÔTE SOUDURES - LÖTSEITE - LATO SALDATURE - LADO SOLDADURAS

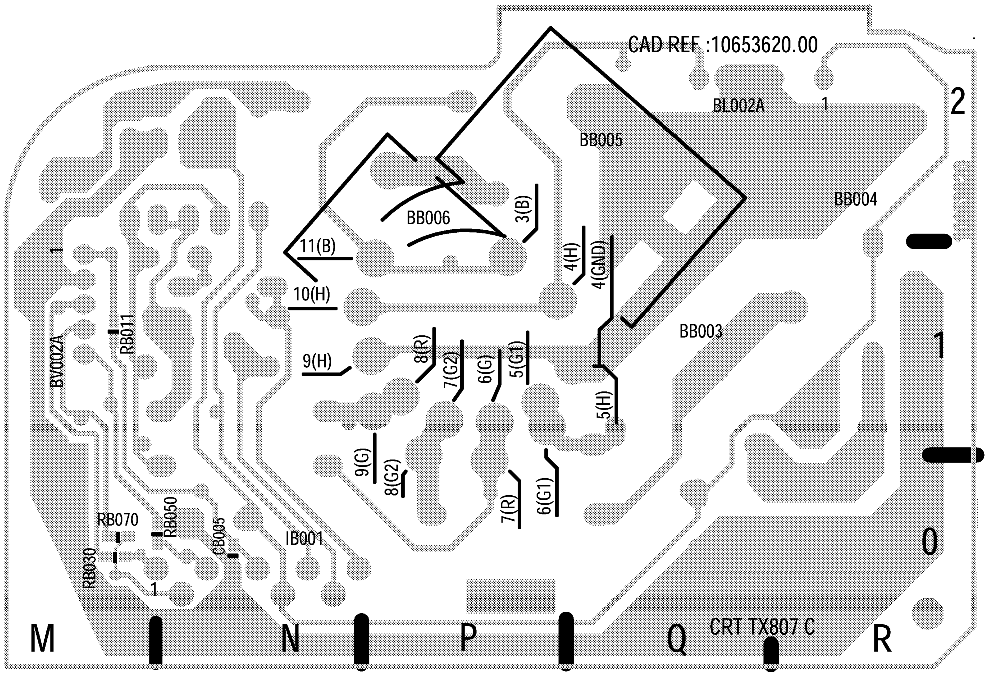

VIDEO AMPLIFIER BOARD - PLATINE AMPLIFICATEURS VIDEO - VIDEOVERSTÄRKERPLATTE - PIASTRA AMPLIFICATORE VIDEO - PLATINA AMPLIFICADOR VIDEO

COMPONENT SIDE - CÖTE COMPOSANTS - BESTÜCKUNGSSEITE - LATO COMPONENTI - LADO COMPONENTES

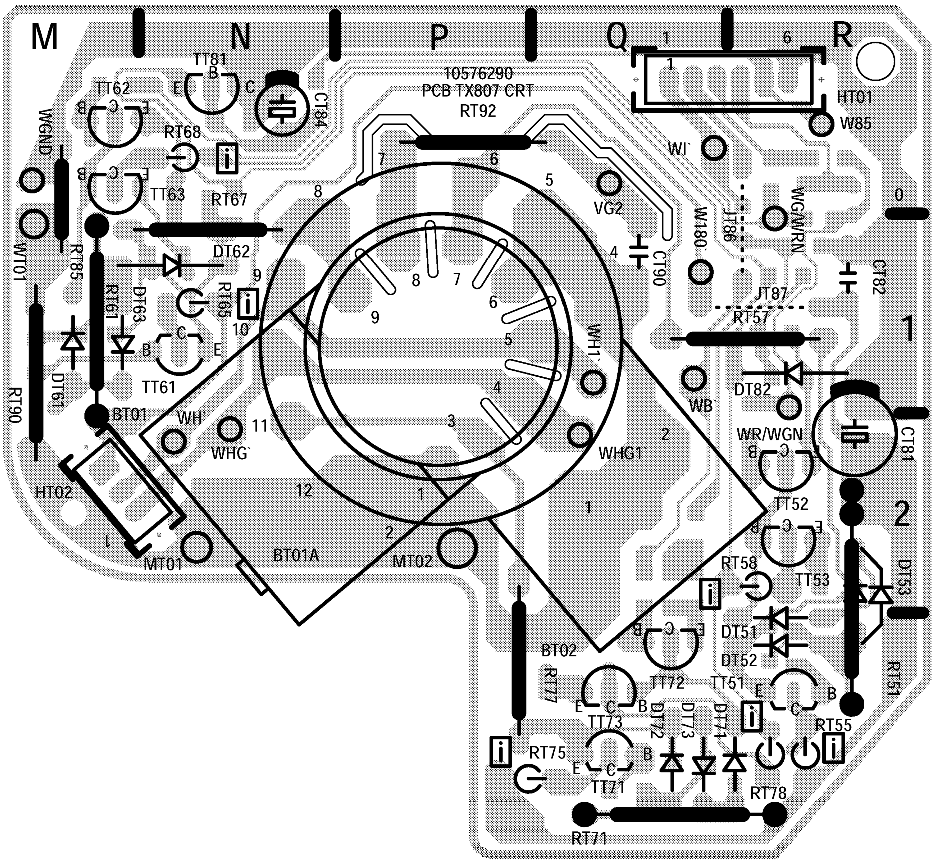

SOLDER SIDE - CÔTE SOUDURES - LÖTSEITE - LATO SALDATURE - LADO SOLDADURAS

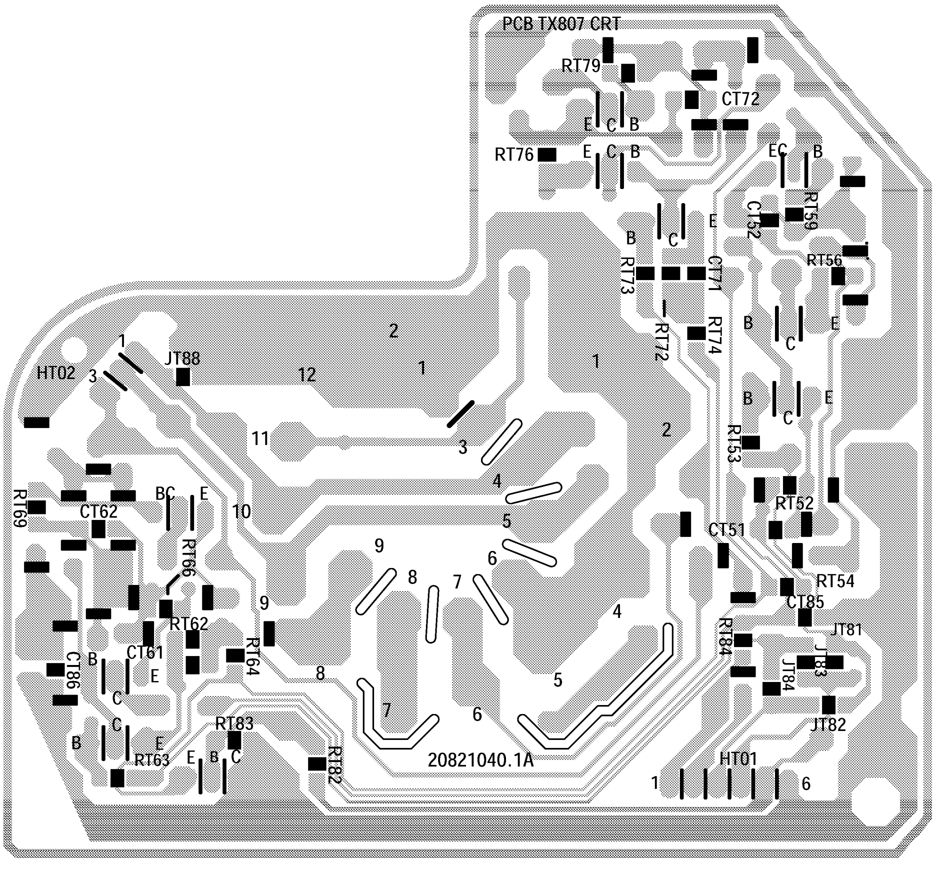

TX807

First issue 02 / 98

TELETEXT MODULE - MODULE TELETEXTE - VIDEOTEXT MODUL
MODULO TELEVIDEO - MODULO TELETEXTO

COMPONENT SIDE - CÖTE COMPOSANTS - BESTÜCKUNGSSEITE -
LATO COMPONENTI - LADO COMPONENTES

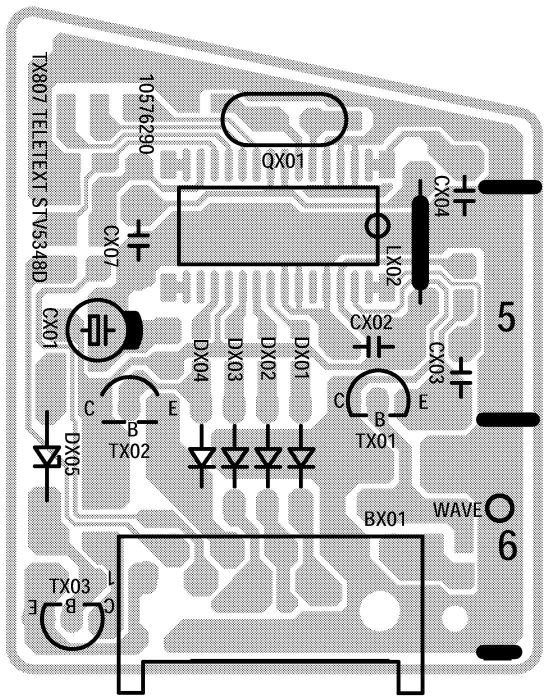

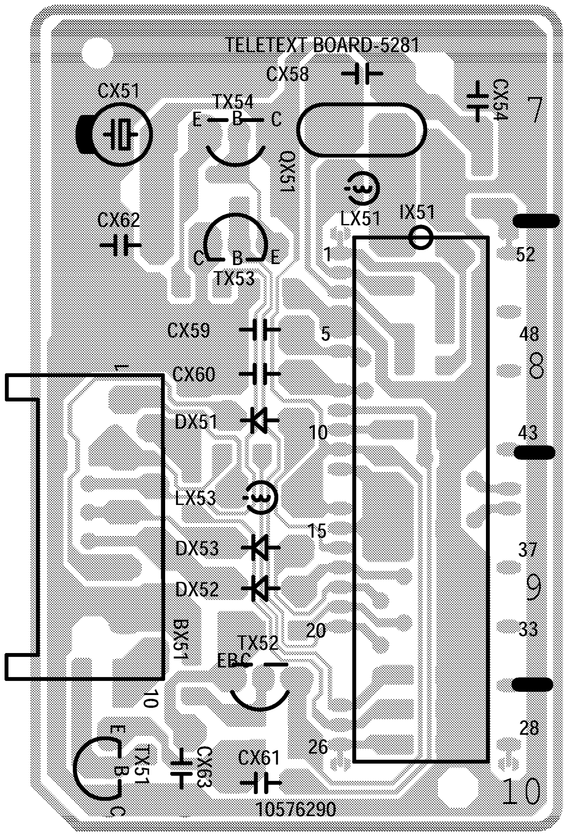
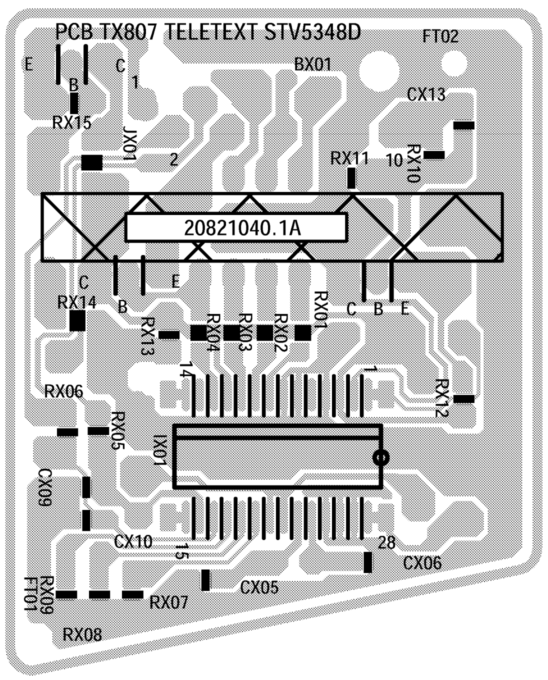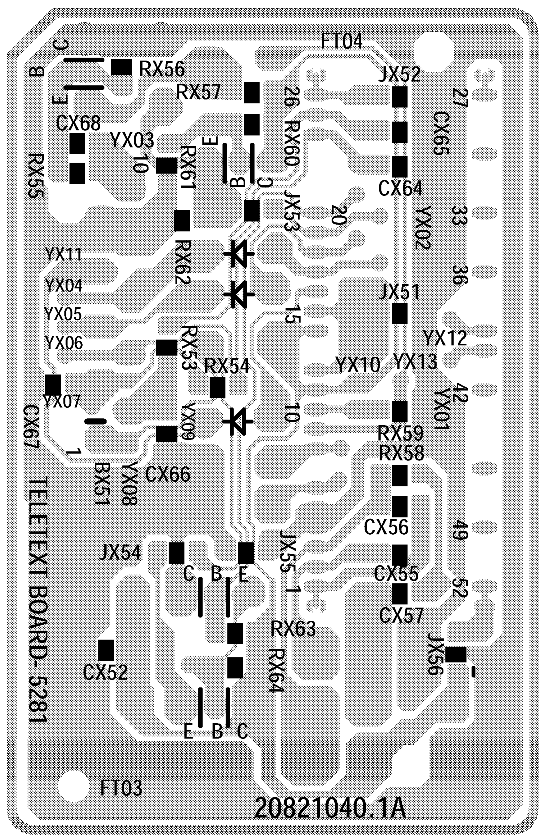
SOLDER SIDE - CÔTE SOUDURES - LÖTSEITE - LATO SALDATURE - LADO SOLDADURAS